SHING LING®
星菱牌工業用縫紉機
INDUSTRIAL SEWING MACHINE
SINCE 1989

台正字第8144號

made in TAIWAN

TAIWAN EXCELLENCE

SL-2800

縱筒型三針五線雙面飾綳縫機

Feed-up-the-arm 3-needle 5-thread Interlock Machine with
Compact Servo Motor and Automatic Thread Trimmer

零件手冊

Spare Parts Book

星菱縫機股份有限公司
SHING LING SEWING MACHINE CO., LTD.
SINCE 1989
CE ISO 9001:2008/CNS 12681
SHING LING

INDEX	索引	Page
MISCELLANEOUS COVERS (1)	機殼及外殼（1）	1
MISCELLANEOUS COVERS (2)	機殼及外殼（2）	2
MISCELLANEOUS THREAD EYELETS	過線裝置及附件	3
MISCELLANEOUS BUSHINGS	套管裝置	4
MISCELLANEOUS CRANKSHAFT	曲軸傳動機構	5-1
PULLEY & BELT GUARD (OPTIONAL)	手輪及護蓋（選配）	5-2
NEEDLE BAR DRIVING MECHANISM	針棒機構	6
SPREADER MECHANISM	上勾針飾線機構	7
PRESSER FOOT MECHANISM	押腳機構	8
LOOPER DRIVING MECANISM	下勾針驅動機構	9
FEED DRIVING MECHANISM (1)	送料機構（1）	10
FEED DRIVING MECHANISM (2)	送料機構（2）	11
LUBRICATING MECHANISM	潤滑機構	12
COMPACT—SERVO MOTOR & ATTACHMENT(OPTIONAL)	電子小馬達傳動機構（選購）	13
UNDER THREAD TRIMMER	自動切線 下切刀機構	14
AUTO TRIMMER THRAD PULL-OFF MECHANISH	自動切線鬆線機構	15-1
UNDER THREAD TRIMMER(ELECTRIC TYPE)	電磁式下切刀驅動機構	16-1
PRESSER FOOT LIFTER (ELECTRIC TYPE)	電磁式抬押腳驅動機構	17
TOP THREAD TRIMMER (ELECTRIC TYPE)	電磁式上切刀機構	18-1
ELECTRIC WIPER (OPTIONAL)	電磁式上撥線機構（選購）	19-1
UNDER THREAD TRIMMER (PNEUMATIC TYPE)	氣壓式下切刀驅動機構	20-1
PRESSER FOOT LIFTER (PNEUMATIC TYPE) (OPTIONAL)	氣壓式抬壓腳組與氣壓閥壓力表（選購）	21-1
TOP THREAD TRIMMER (PNEUMATIC TYPE) (OPTIONAL)	氣壓式上切刀機構（選購）	22-1
THREAD STAND &ACCESSORIES (Standard)	線架及附件(標準型)	23
THREAD STAND &ACCESSORIES (FOR THREAD TRIMMING)	線架及附件(切線用)	23-1
ATTACHING PLATE C.Set (OPTIONAL)	併縫大布板組(選配)	23-2
LOOPER DRIVING MECANISM(264)(Optional)	雙鈎針驅動機構(264)(選配)	24

1

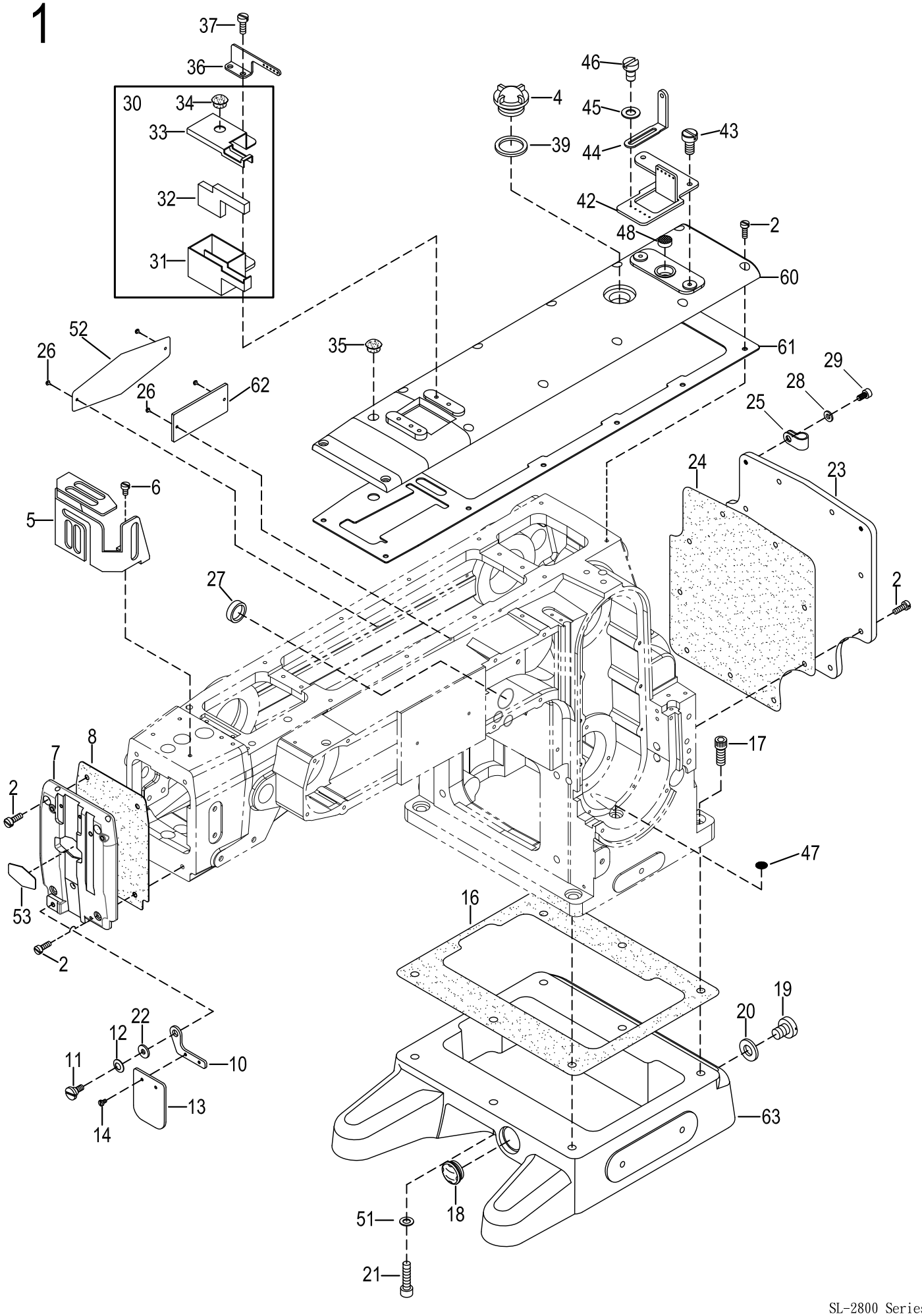
37
36
30
34
33
32
31
46
4
45
39
44
43
42
48
2
60
61
52
26
35
29
28
25
26
62
24
23
6
5
27
2
8
7
17
2
47
53
16
2
19
20
22
12
11
10
13
14
63
51
18
21

MISCELLANEOUS COVERS (1) 機殼及外蓋(1) 1

Ref. No.	Parts No.	Description	產品名稱	Amt. Req.
1				
2	SV222	Screw(M4-0.7×12)	螺絲	25
3				
4	FA21-A	Oil Sight Window	油鏡	1
5	L0105	Needle Bar Guard	針柱護罩	1
6	GJ36	Screw(M4-0.7×5.8)	螺絲	2
7	L0107-1	Head Cover	面蓋	1
8	L0108	Head Cover Gasket	防油墊片	1
9				
10	L0110	Eye Guard Holder	護目鏡之架	1
11	L0111	Screw(M4-0.7×7)	螺絲	1
12	L0112	Wave Washer	墊片	1
13	L0113	Eye Guard	護目鏡片	1
14	SV104	Screw(3/32-56×5)	螺絲	2
15				
16	L0116	Oil Reservoir Gasket	止油墊片	1
17	SF251NI	Screw(M8-1.25×20)	螺絲	5
18	L0118	Oil Gauge	油槽鏡	1
19	SF160	Drain Hole Screw(3/8-24×12)	螺絲	1
20	RF25	O-ring(P10)	O型油環	1
21	SF243NI	Screw(M6-1×25)	螺絲	1
22	GB24	Washer	墊片	2
23	L0123-1	Rear Cover	後蓋	1
24	L0124	Rear Cover Gasket	防油墊片	1
25	1M204	Plastic Clamp(Optional)	塑膠固定夾(選配)	1
26	FA11	Rivet	鉚釘	4
27	L0218	Seal Plug	油封	1
28	WF04-1	Washer (Optional)	墊片(選配)	1
29	SF224NI	Screw(M4-0.7×8)(Optional)	螺絲(選配)	1
30	L0130	SP Device, C. Set	矽油盒(組)	1
31	L0131	SP Container	矽油槽	1
32	L0132	SP Felt	氈墊	1
33	L0133	SP Container Cover	矽油蓋	1
34	RF10-1	Seal Plug	油封	1
35	L0235	Seal Plug	油封	1
36	L0136	SP Eyelet	過線片	1
37	SF220	Screw(M4-0.7×10)	螺絲	2
38				
39	FA22	Seal Plug	油封	1
40				

＊ Ref. No. 41 to 63 ・・・・・See the following page

1

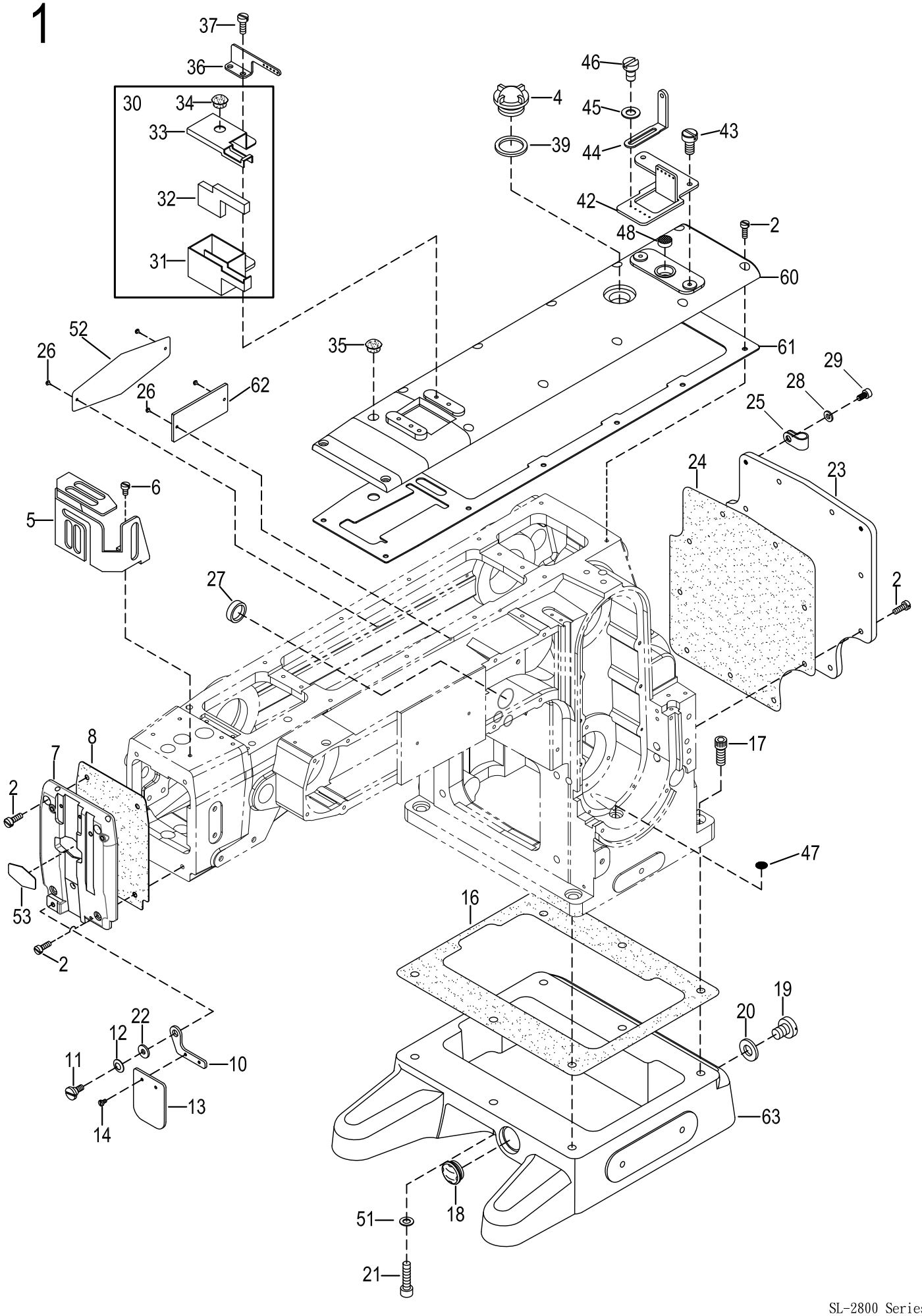
37
36
30
34
33
32
31
46
4
45
39
44
43
42
48
2
60
61
52
26
35
29
28
25
26
62
24
23
6
5
27
2
8
7
17
2
47
53
16
2
19
20
22
12
11
10
13
14
63
51
18
21

MISCELLANEOUS COVERS (1) 機殼及外蓋(1) 1

Ref. No.	Parts No.	Description	產品名稱	Amt. Req.
41				
42	L0142	Need Thread Eyelet	導線過線架	1
43	SV221	Screw(M4-0.7×8)	螺絲	2
44	L0144	Thread Eyelet Support	導線支柱	5
45	L0145	Washer	墊片	5
46	L0146	Screw(M2-0.4×3.5)	螺絲	5
47	GA42	Oil Filter Screen	過濾網	1
48	L0148	Oil Filter Screen	過濾網	1
51	VB24	Washer	墊片	1
52	L0138-1	Serial Number Plate	銘牌	1
53	J0460	Emblem	名牌	1
60	LL0160	Top Cover	上蓋	1
61	LL0161-2	Top Cover Gasket	防油墊片	1
62		Model Plate	機號銘牌	1
63	LL0163-3	Oil Reservoir	油槽	1

＊Ref. No. 1 to 40 ・・・・・See the preceding page.

2

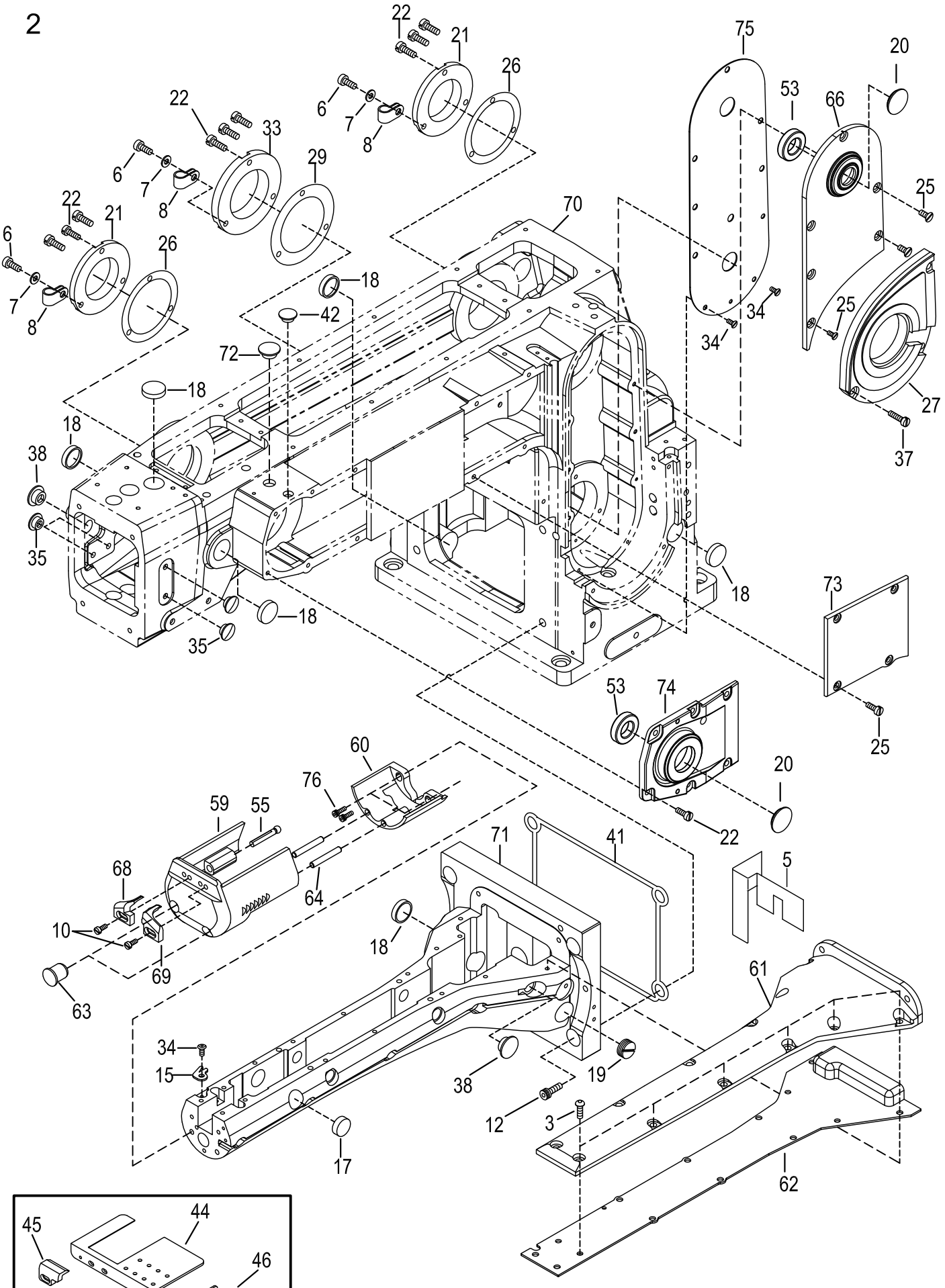
22
21
26
6
7
8
33
29
75
20
53
66
25
70
18
42
72
34
27
37
38
35
73
74
60
76
59
55
71
41
5
68
64
10
69
63
61
34
15
38
19
12
3
17
62
45
44
46
47
48
43

MISCELLANEOUS COVERS(2) 機殼及外蓋(2) 2

Ref. No.	Parts No.	Description	產品名稱	Amt. Req.
1				
2				
3	LL0203	Screw(M4-0.7×14)	螺絲	12
4				
5	L0205	Cylinder Oil Defender	防油蓋	1
6	SF224Ni	Screw(M4-0.7×8)(Optional)	螺絲(選配)	3
7	WF04	Washer (Optional)	墊片(選配)	3
8	FL23	Plastic Clamp(Optional)	塑膠固定夾(選配)	3
9				
10	SF113	Screw(SM9/64-40*6)	螺絲	2
12	L0212Ni	Screw(M8-1.25×22)	螺絲	4
13				
14				
15	L0215-4	Thead Chain Cutting Knife	割線刀	1
17	GD22-1	Seal Plug	油封	1
18	L0218	Seal Plug	油封	7
19	L0219	Plug Screw(M14-1×4.5)	螺絲	1
20	L0220B	Head Cover Seal Plug	膠塞(大)	2
21	L0221	Bearing Cover(Smail)	培林蓋(小)	2
22	SV232	Screw(M4-0.7×10)	螺絲	19
23				
24				
25	GB37	Screw(M4-0.7×10)	螺絲	6
26	L0226-1	Bearing Cover(Smail) Gasket	止油墊片	2
27	L0227	Vertical Belt Cover(Lower)	縱向皮帶蓋(下)	1
28				
29	L0229	Bearing Cover(Large) Gasket	防油墊片	1
33	L0233-1	Bearing Cover	培林蓋	1
34	L0234	Screw(M3-0.5×6)	螺絲	4
35	L0235	Seal Plug	油封	4
37	SF220-1	Screw(M4-0.7×16)	螺絲	3
38	RF10-1	Seal Plug	油封	2
41	L0241	Seal Plug	下座油封	1
42	RF08	Seal Plug	油封	1
43	L0243-1	Width Aadjuster	可調檔邊	1
44	LL0244	Folder Stand(Standard)	折下擺固定座 (標準型)	1
45	L0245	Fabric Edge Guide (Left)	左檔邊	1
46	GW15	Screw(M3-0.5×5)	螺絲	2
47	WF04	Washer	墊片	2
48	SV208	Screw(M3 X 0.5-4.4)	螺絲	1
53	VF19	Ball Bearing 6202ZZ(ϕ 35x ϕ 15x11)	滾珠培林(大)	2
55	LL0255	Guide Fork	球椿	1
58				
59	LL0259	Cylinder Front Cover	縱筒前蓋	1
60	LL0260	Cylinder Front Cover	縱筒前蓋(小)	1

＊ Ref. No. 61 to 76 ・・・・・See the following page

2

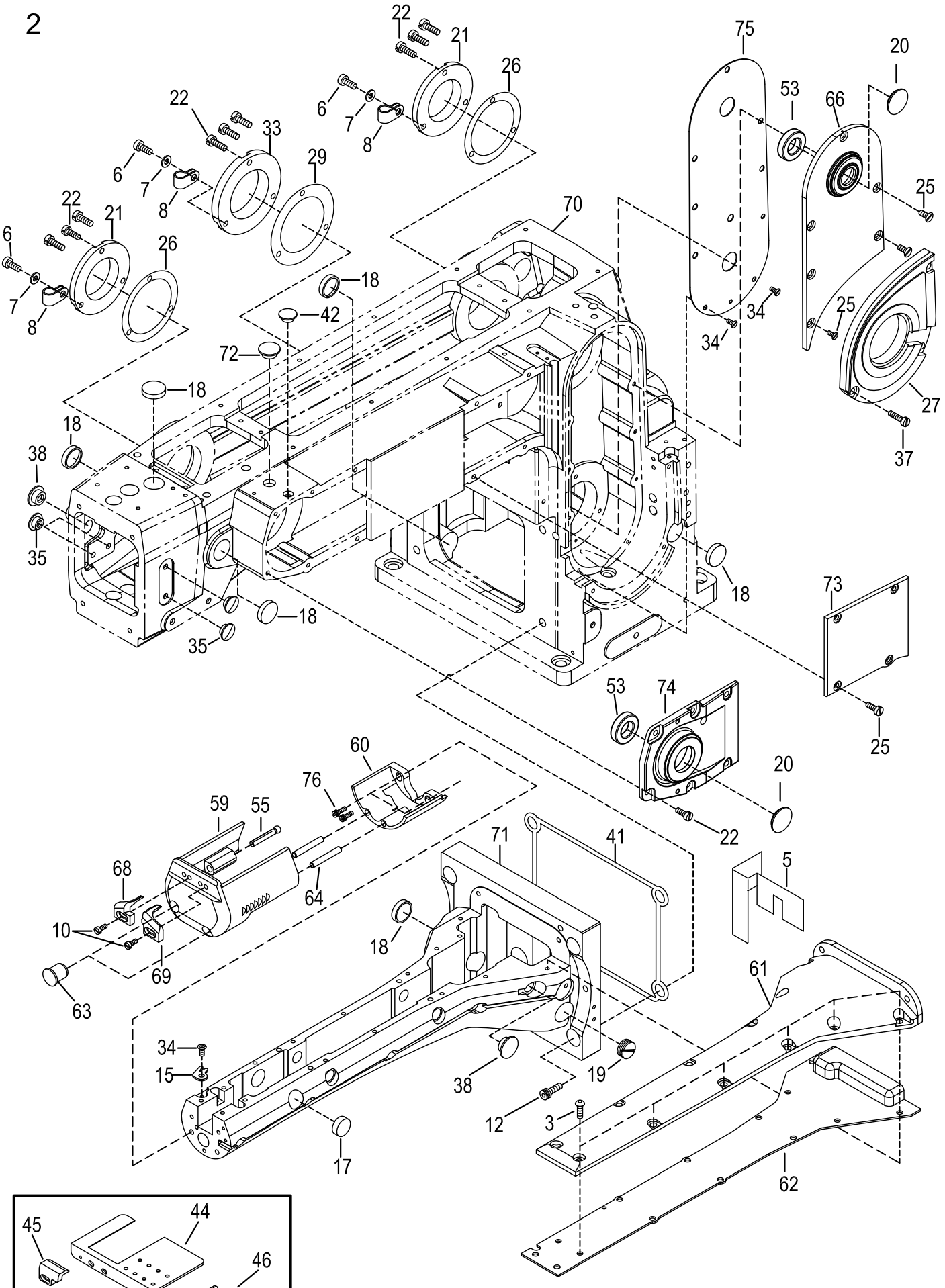
22
21
26
6
7
8
33
29
75
20
53
66
25
70
18
42
72
34
27
37
38
35
73
74
60
76
59
55
71
41
5
68
64
10
69
63
61
34
15
38
19
12
3
17
62
45
44
46
47
48
43

MISCELLANEOUS COVERS(2) 機殼及外蓋(2) 2

Ref. No.	Parts No.	Description	產品名稱	Amt. Req.
61	LL0261-2	Cylinder Top Cover(Standard)	縱筒上蓋 (標準型)	1
62	LL0262	Cylinder Top Cover (Inner)(Standard)	縱筒上蓋(內側) (標準型)	1
63	RF06-1	Seal Plug	封塞	2
64	LL0264	Pin	針狀軸承	2
66	L0266	Vertical Belt Cover(Upper)	縱向皮帶蓋(上)	1
68	LL0268	Fabric Guide(Left)	導布器(左)	1
69	LL0269	Fabric Guide(Right)	導布器(右)	1
70	LL01001-3	Machine Frame Unit	機殼	1
71	LL02101-5	Lower Arm Frame	下座	1
72	L0159	Seal Plug	膠塞	1
73	LL0273	Lateral Belt Cover	橫向皮帶蓋(右)	1
74	LL0274-1	Lateral Belt Cover	橫向皮帶蓋(左)	1
75	L0264-1	Bearing Plate(Large)	培林片(大)	1
76	SF230	Screw(M5 × 0.8 - 12)	螺絲	2

＊Ref. No. 1 to 60 ・・・・・See the preceding page.

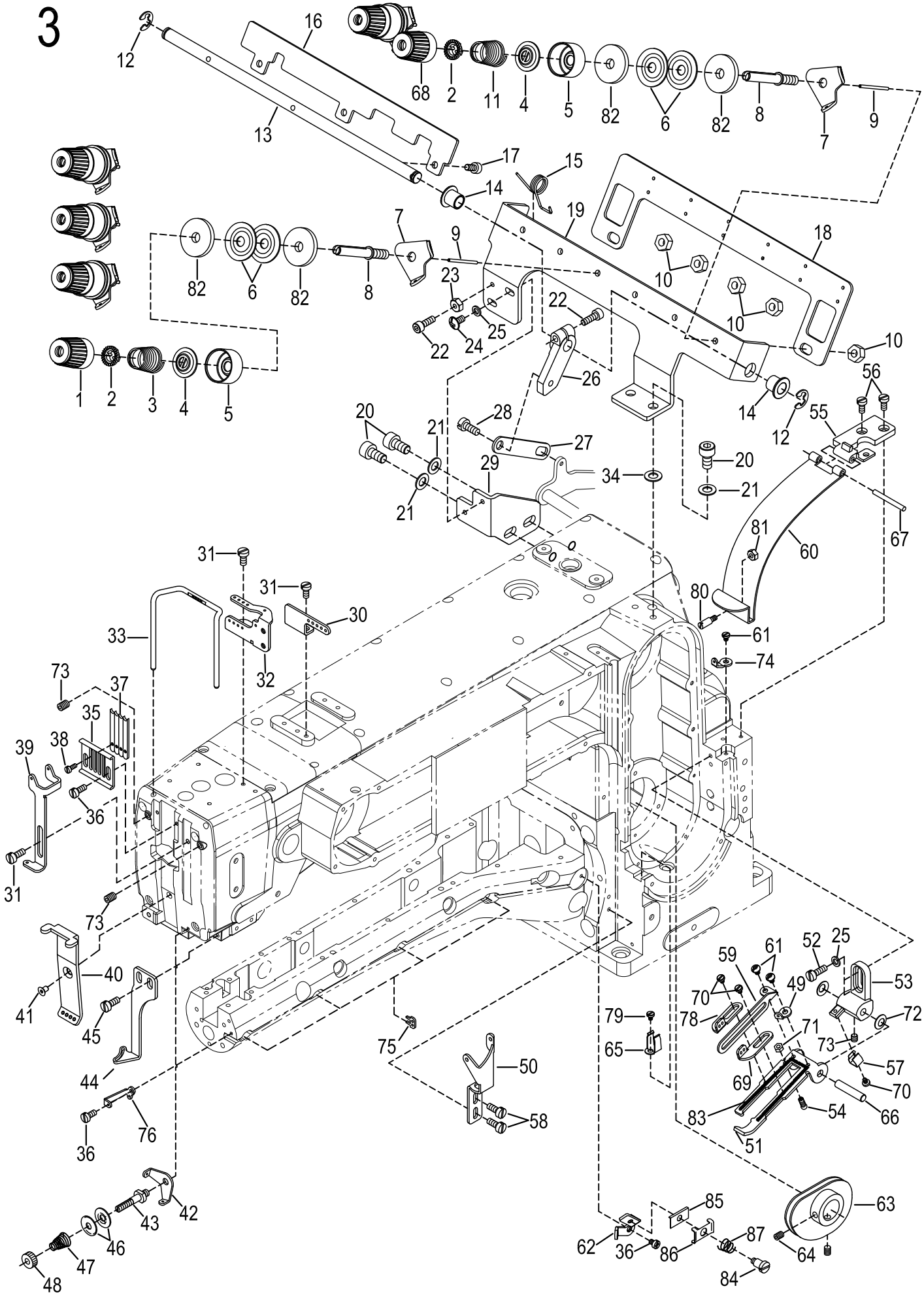
3
SL-2800 Series

Ref. No.	Parts No.	Description	產品名稱	Amt. Req.
1	FK20-1	Thread Thesion Spring Cap	張力調整鈕(藍)	4
2	FK19	Tension Spring Bushing	彈簧套管	6
3	VC03	Tension Spring (Needle)	張力彈簧(針)	4
4	L0304	Tension Spring Lift Washer	墊片	6
5	FJ21	Thread Tension Spring Retainer	彈簧固定座	6
6	FK14	Tension Disc	張力盤	12
7	L0307	Tension Disc Eyelet	過線片	6
8	L0308-1	Tension Post	彈簧支柱	6
9	L0309	Tenshion Disc Separator Pin	分離銷	6
10	NF31	Nut	螺帽	6
11	VC05	Tension Spring(Looper)	張力彈簧(下勾針)	2
12	GK13	Retaining Ring	扣環	2
13	L0313	Tension Release Shaft	鬆線棒	1
14	L0314	Tension Release Bushing	鬆線套管	2
15	L0315	Return Spring	彈簧	1
16	L0316-1	Tension Disc Separator	鬆線滑板	1
17	SF224	Screw(M4-0.7×8)	螺絲	3
18	L0318	Thread Guide Plate	導板	1
19	L0319	Tension Post Support	張力支柱座	1
20	GL16Ni	Screw(M6-1×12)	螺絲	4
21	WF06	Washer	墊片	4
22	SF225Ni	Screw(M4-0.7×10)	螺絲	2
23	NF27Ni	Nut	螺帽	1
24	MFM080	Screw(M4-0.7×8)	螺絲	2
25	WF04	Washer	墊片	4
26	L0326	Tension Release Lever	鬆線曲柄	1
27	L0327	Tension Release Lever Connector	曲柄連接片	1
28	L0328	Screw(M5-0.8×5.4)	螺絲	2
29	L0329	Connecting Plate	張力連接板	1
30	L0330	Needle Thread Eyelet(Rear)	針線過線器(後)	1
31	GJ36	Screw(M4-0.7×5.8)	螺絲	5
32	L0332	Needle Thread Eyelet(Middle)	針線過線器(中)	1
33	L0333-1	Needle Thread Eyelet(Front)	針線過線器(前)	1
34	15-38	Washer	墊片	2
35	L0335	Holder	針線固定片	1
36	GK08	Screw(M3-0.5×6)	螺絲	5
37	L0337	Needle Thread Strike-off Pin	銷	4
38	18-19	Screw(M2-0.4×3.8)	螺絲	4
39	L0339	Top Cover Thread Take-up Eyelet	上飾線揚線過線片	1
40	L0340-2	Needle Thread Guide	針線導板	1
41	MFS045	Screw(M4-0.7×4.5)	螺絲	1
42	VC46	Supplementary Thread Guide	上飾線輔助導板	1
43	L0343-1	Tension Post	上飾線張力調整組支柱	1

＊ Ref. No. 44 to 87 ・・・・・See the following page

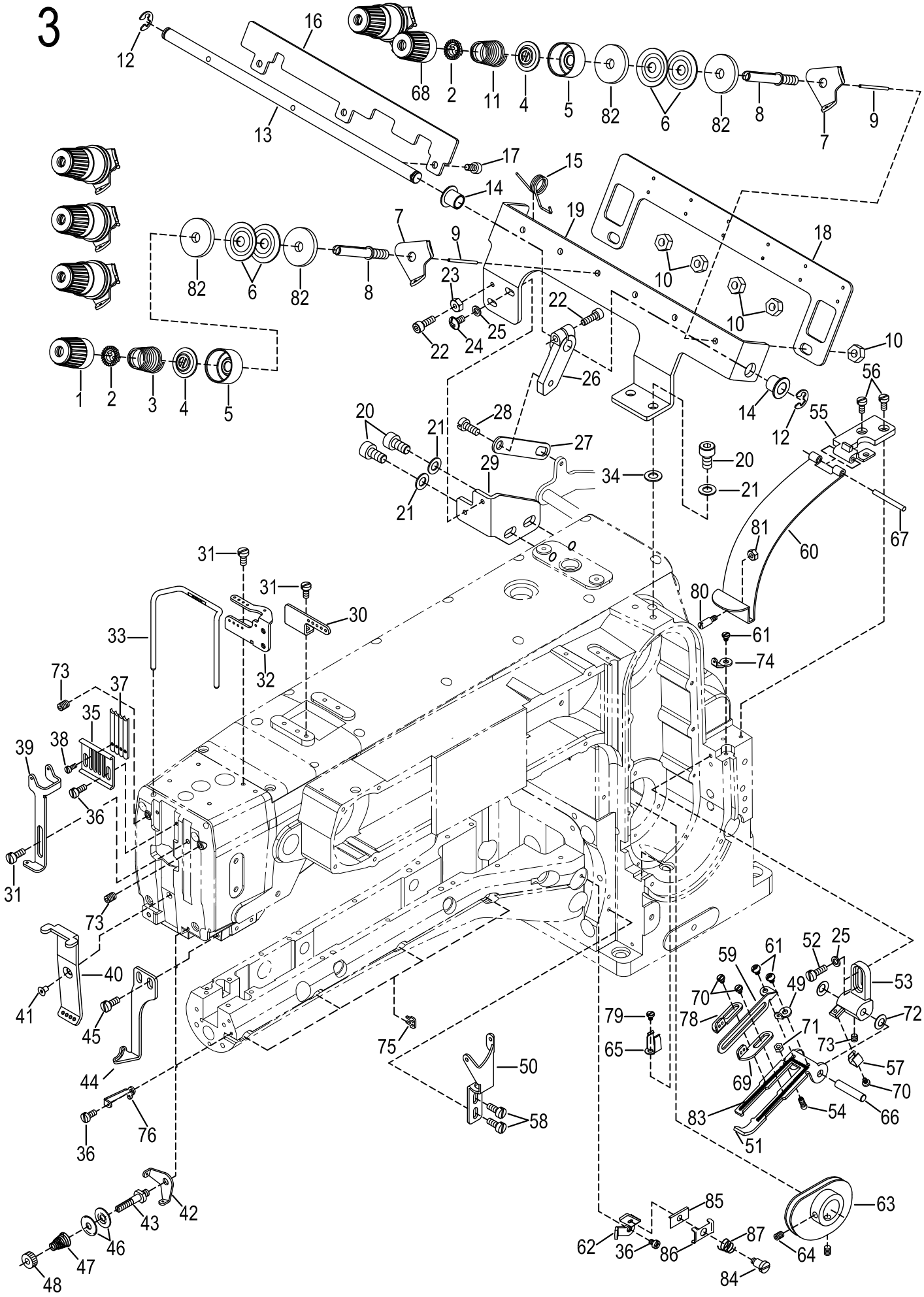
3
SL-2800 Series

Ref. No.	Parts No.	Description	產品名稱	Amt. Req.
44	L0344-1	Top Cover Thread Guide	上飾線導板	1
45	GB37	Screw(M4-0.7×8)	螺絲	2
46	FC24	Top Cover Tension Disc(Small)	上飾線過線盤(小)	2
47	VC42	Top Cover Tension Spring	彈簧	1
48	L0348	Nut	螺帽	1
49	VJ08	Looper Thread Eyelet	勾針過線片	1
50	L0350	Lower Frame Eyelet	下座底線過線	1
51	L0351	Take-up eyelet holder	提線托板	1
52	SV222	Screw(M4-0.7×12)	螺絲	2
53	L0353	Supporting Plare Base	提線托板座	1
54	L0354	Screw	螺絲	1
55	L0355-1	Cover Hinge	護蓋鉸板	1
56	SF116	Screw(SM9/64-40×9)	螺絲	1
57	L0357	Cover Latch Spring	夾簧	1
58	J0455-1	Screw(SM9/64-40×5.5)	螺絲	2
59	L0359	Casr-off plate	提線護蓋拖板	1
60	L0360-1	Take-up Cover	提線護蓋	1
61	SV210	Screw(M3-0.5×4)	螺絲	3
62	L0349-1	Thread Eyele	底線過線板	1
63	L036311	Looper Thread Take-up	下勾針提線輪	1
64	SF142	Screw(SM7/32-32×3.7)	螺絲	2
65	L0365	Cover Latch Spring	夾簧	1
66	L0366	Pin	銷	1
67	L0367-1	Pin	銷	1
68	FK20	Thread Thesion Spring Cap	張力調整鈕(紅)	2
69	FJ12	Thread Take-up Eyelet(Right)	提線板(右)	1
70	SV206	Screw(M2.5-0.45×3.5)	螺絲	3
71	NV11	Nut	螺帽	1
72	VB29-1	Conical Spring Washer	錐形彈簧墊片	2
73	SF228	Screw(M4-0.7×4)	螺絲	3
74	VJ08-1	Looper Thread Eyelet	勾針過線片	1
75	L0375	Looper Thread Eyelet(Middle)	勾針過線片(中)	4
76	L0376-2	Looper Thread Eyelet(Front)	勾針過線片(前)	1
77				
78	FJ14	Thread Take-up Eyelet (Left)	調線板(左)	1
79	MDA060	Screw(M3-0.5×6)	螺絲	1
80	16-30	Screw(M4-0.7×5)	螺椿	1
81	NF27	Nut	螺帽	1
82	FK12	Felt	氈墊	12
83	IM001	Laced wire	羊毛氈	1
84	M0724	Screw (M3-0.5)	螺絲	1
85	VC34	Thread Retainer Disc Support	小調子板	1
86	VC35	Needle Thread Retainer Disc	針線固定片	1
87	L0347	Tension Spring	針線張力彈簧	1

＊Ref . No . 1 to 43 ・・・・・See the preceding page.

4

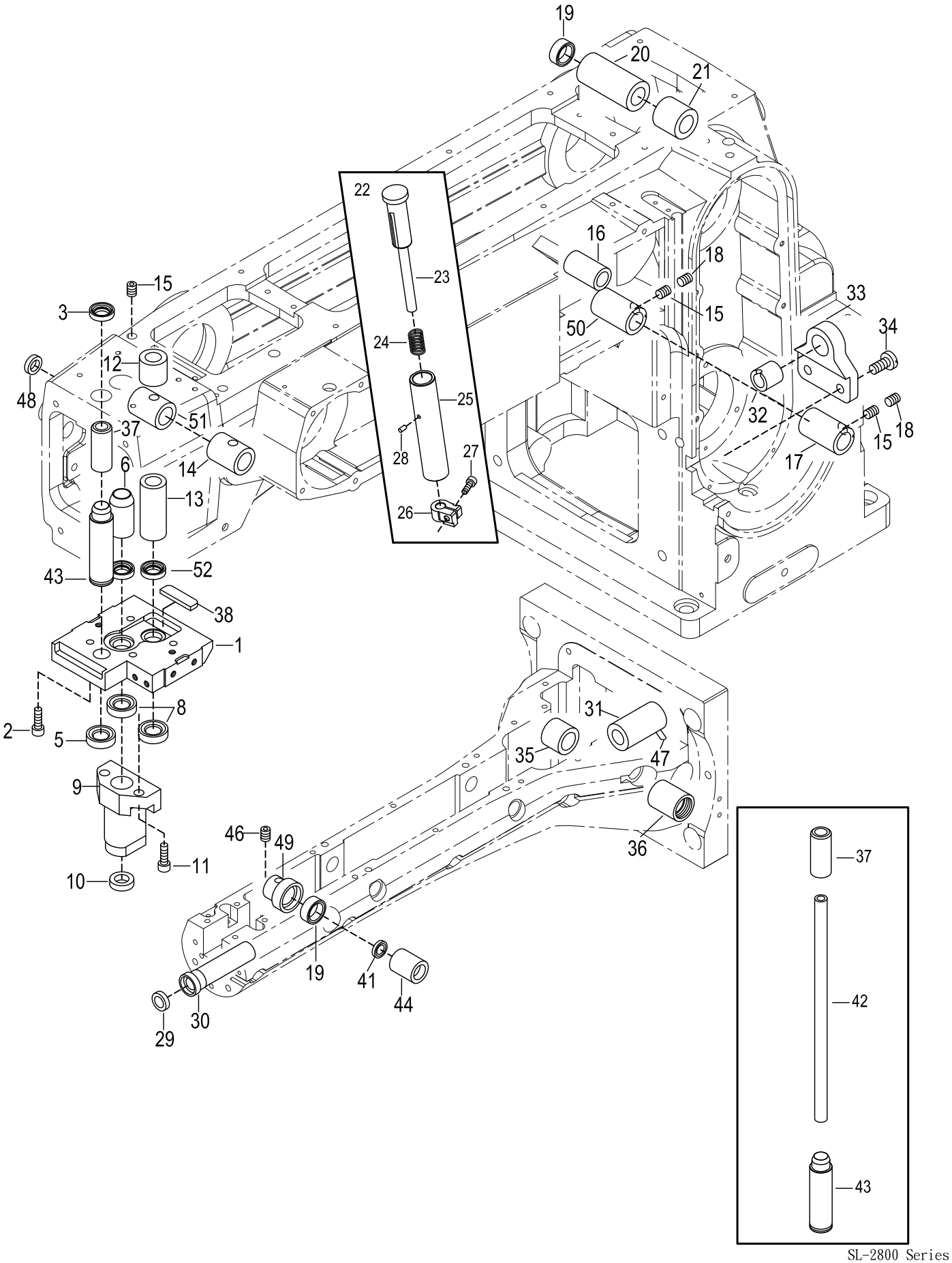

SL-2800 Series

MISCELLANEOUS BUSHINGS 套管裝置 4

Ref. No.	Parts No.	Description	產品名稱	Amt. Req.
1	L0401-4	Needle Bar Oil Defender	針棒防油槽	1
2	SV223	Screw(M4-0.7×14)	螺絲	4
3	L0403	Oil Seal	油封	1
4				
5	N1048	Oil Seal	止油環	1
6	L0406-1	Presser Bar Bushing	押腳棒套管	1
7				
8	L0408	Oil Seal	油封	2
9	L0409-2	Presser Bar Guide(Lower)	押腳棒導管(下)	1
10	VD04	Oil Seal	油封	1
11	SF226Ni	Screw(M4-0.7×12)	螺絲	2
12	L0412	Spreader Shaft Bushing(Upper)	上勾針軸套管(上)	1
13	L0413-1	Spreader Shaft Bushing(Lower)	上勾針軸套管(下)	1
14	L0414-2	Needle Bar Rocking Shaft Bushing	針棒擺動套管	1
15	GL12	Screw(M5-0.8×8)	螺絲	3
16	L0416	Control Lever Shaft Bushing	控制桿套管	1
17	L0417-2	Looper Rocker Shaft Bushing(Right)	勾針擺動右套管	1
18	SV250	Screw(M5-0.8×5)	螺絲	2
19	N0422	Oil Seal	油封	2
20	L0420-2	Lifter Lever Bushing(Left)	押腳提升套管(左)	1
21	L0421-1	Lifter Lever Bushing(Right)	押腳提升套管(右)	1
22	L0422-1	Pushbutton, C. Set	按鈕組	1
23	L0423-2	Pushbutton Pin	按鈕銷	1
24	L0424-1	Pushbutton Spring	彈簧	1
25	L0425-1	Pushbutton Sleeve	按鈕套筒	1
26	LL0426	Stopper	針距止塊	1
27	SF225	Screw(M4-0.7×10)	螺絲	1
28	L0428-1	Spring Pin	φ2空心閂	1
29	L0429	Oil Seal	油封	1
30	L0430	Looper Shaft Bushing(Front)	下勾針軸套(前)	1
31	L0431	Looper Shaft Bushing(Middle)	下勾針軸套管(中)	1
32	L0432	Looper Shaft Bushing(Rear)	下勾針軸套管(後)	1
33	L0433	Looper Shaft Bracket	下勾針軸支架	1
34	L0434	Screw(M5-0.8×10)	螺絲	2
35	L0435-2	Feed Bar Shaft Bushing(Left)	送料軸套管(左)	1
36	L0436	Feed Bar Shaft Bushing(Right)	送料軸套管(右)	1
37	L0437-4	Needle Bar Bushing (upper)	銅套(上)	1
38	L0438	Felt	羊毛氈	1
39				
40				

＊ Ref. No. 41 to 52 ・・・・・See the following page

4

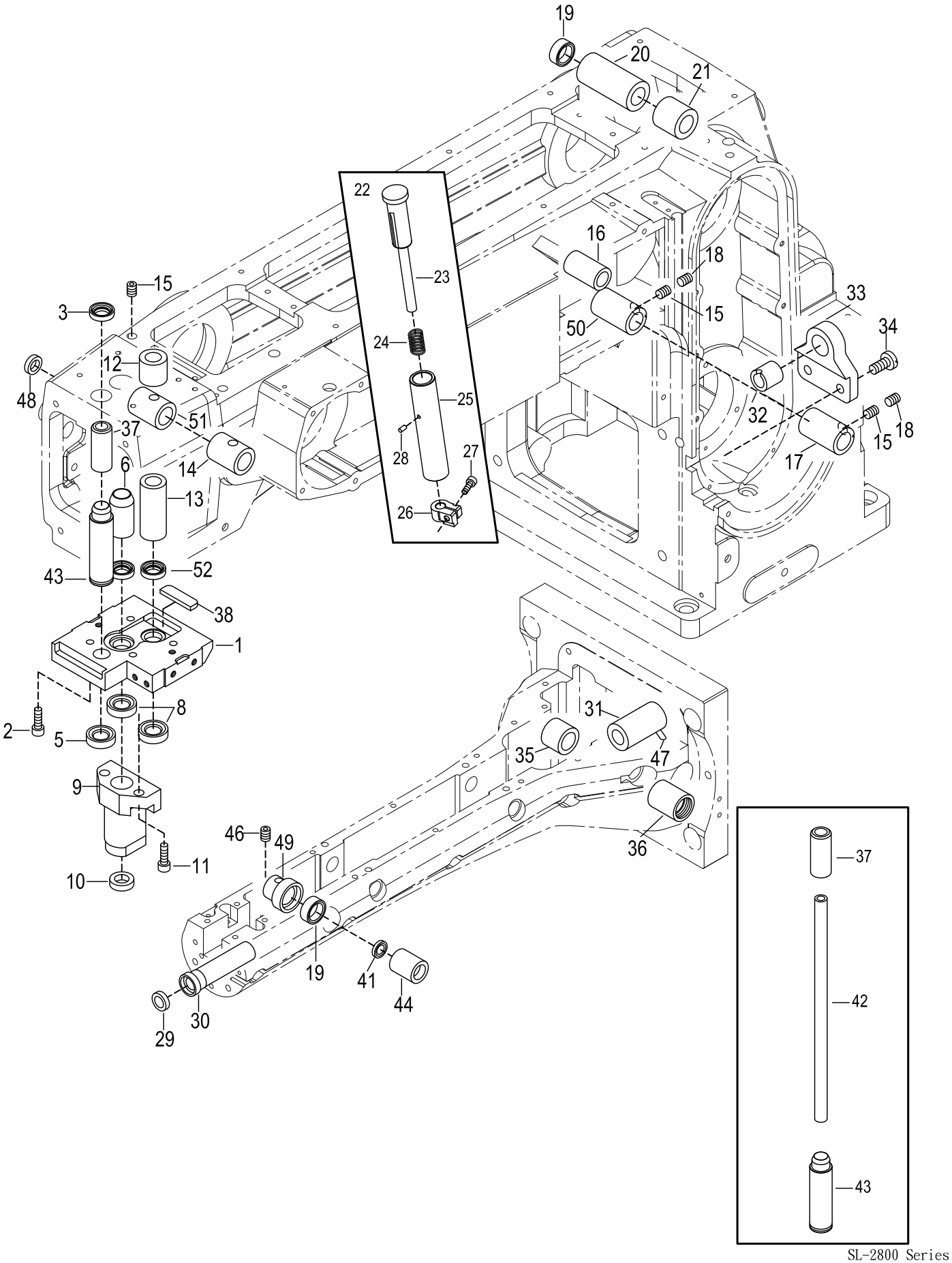

SL-2800 Series

MISCELLANEOUS BUSHINGS 套管裝置 4

Ref. No.	Parts No.	Description	產品名稱	Amt. Req.
41	L0441	Oil Seal	油封	1
42	L0442-1	Needle Bar	針棒	1
43	L0443-5	Needle Bar Bushing (Lower)	銅套(下)	1
44	LL0444	Feed Bar Block(Front) Shaft(Left)	送料具前軸套管(左)	1
45				
46	SV227	Screw(M4-0.7×5)	螺絲	1
47	L0447	Tube	鐵管	1
48	D1716-1	Head Cover Seal Plug	膠塞	1
49	LL0449	Feed Bar Block(Front) Shaft(Right)	送料具前軸套管(右)	1
50	L0449-1	Looper Rocker Shaft Bushing(Left)	勾針擺動左套管	1
51	L0450	Needle Bar Rocking Shaft Bushing(Left)	針棒擺動套管(左)	1
52	L0452	Oil Seal	油封	2

＊Ref. No. 1 to 40 ・・・・・See the preceding page.

5-1

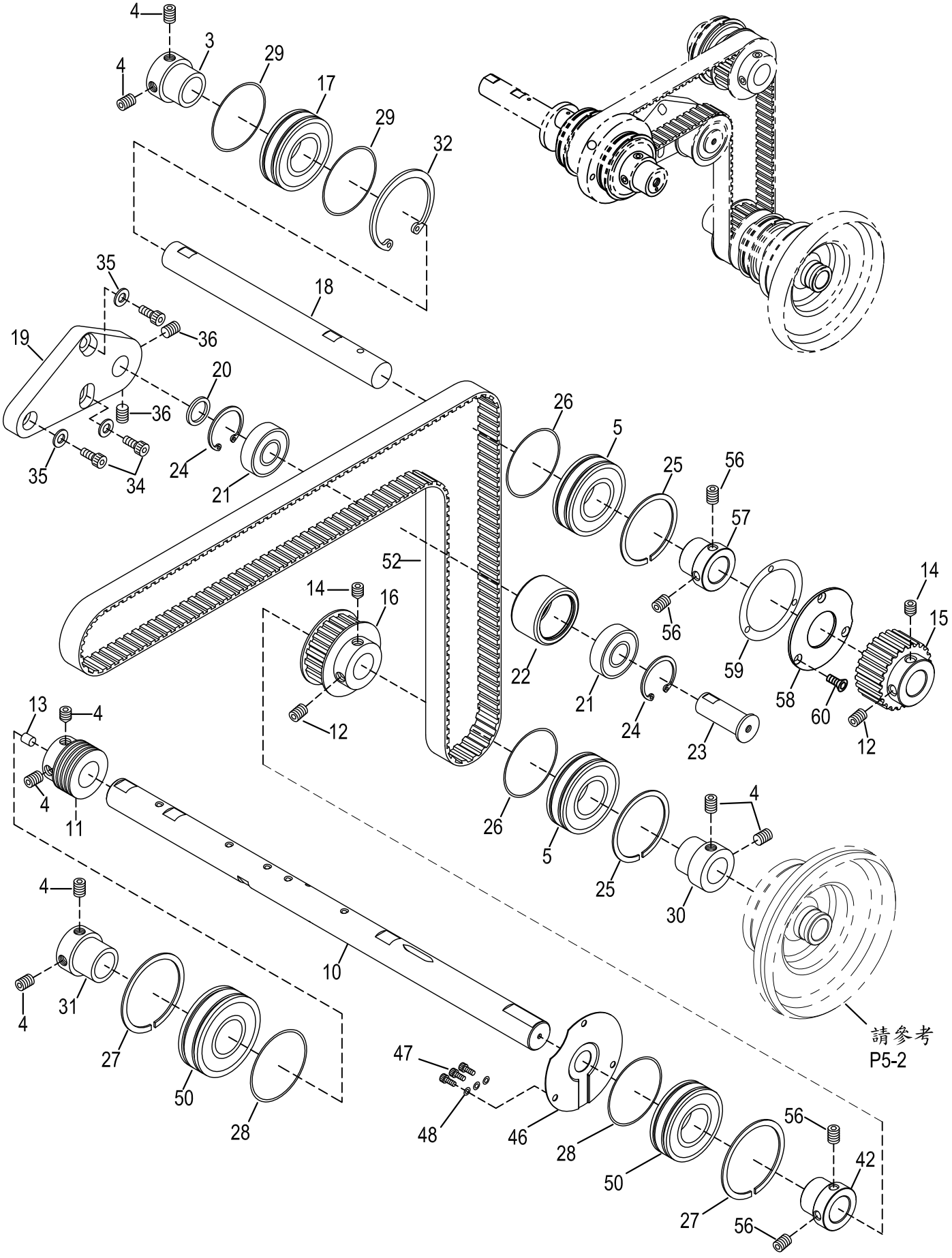
4
3
29
17
29
32
4
35
18
19
36
20
36
35
34
24
21
26
5
25
56
57
52
14
16
56
14
15
22
21
24
23
59
58
60
12
12
13
4
4
11
26
5
25
4
30
4
10
4
31
27
50
28
47
48
46
28
50
27
56
42
56
請參考
P5-2

Ref. No.	Parts No.	Description	產品名稱	Amt. Req.
1				
2				
3	L0503	Adapter	培林轉接器	1
4	SV260	Screw(M6-1×5)	螺絲	8
5	L0505	Ball Bearing(42×20)	滾珠培林	2
6				
7				
8				
9				
10	L0510-11	Main Shaft	主軸	1
11	L0511	Oil Pump Driving Worm	油泵傳動螺桿	1
12	SF240ET	Screw(M6-1×6)	螺絲	2
13	L0513	Seal Plug	止油封塞	1
14	MIR080	Screw(M6-1×8)	螺絲	2
15	L0517-1	Upper Spindle Gear	上主軸齒輪	1
16	L0516-6	Upper Shaft Timing Pulley	下軸齒輪	1
17	GE11-6	Ball Bearing	滾珠培林	1
18	L0518-8	Upper Shaft	上軸	1
19	L0519-1	Bearing house	培林座	1
20	L0520-1	Washer	墊片	1
21	VE22	Ball Bearing	滾珠培林	2
22	L0522-4	Inner Belt Wheel	被動輪	1
23	L0523-1	Shaft	軸心	1
24	VE21	Retaining Ring	扣環	2
25	L0525	Retaining Ring	止動環	2
26	L0526	Oil Seal	油封	2
27	L0527	Oil Seal	止動環	2
28	L0528	Oil Seal	油封	2
29	GE59-1	Oil Seal	油封	2
30	L0530-1	Adapter	培林轉接器	1
31	L0531-1	Adapter	培林轉接器	1
32	L0532-1	Retaining Ring	扣環	1
33				
34	SF231	Screw(M5-0.8×14)	螺絲	3
35	VK48	Washer	墊片	3
36	SV264	Screw(M6-1.0×8)	螺絲	2
37				
38				
39				
40				

＊ Ref. No. 41 to 60 ・・・・・See the following page

5-1

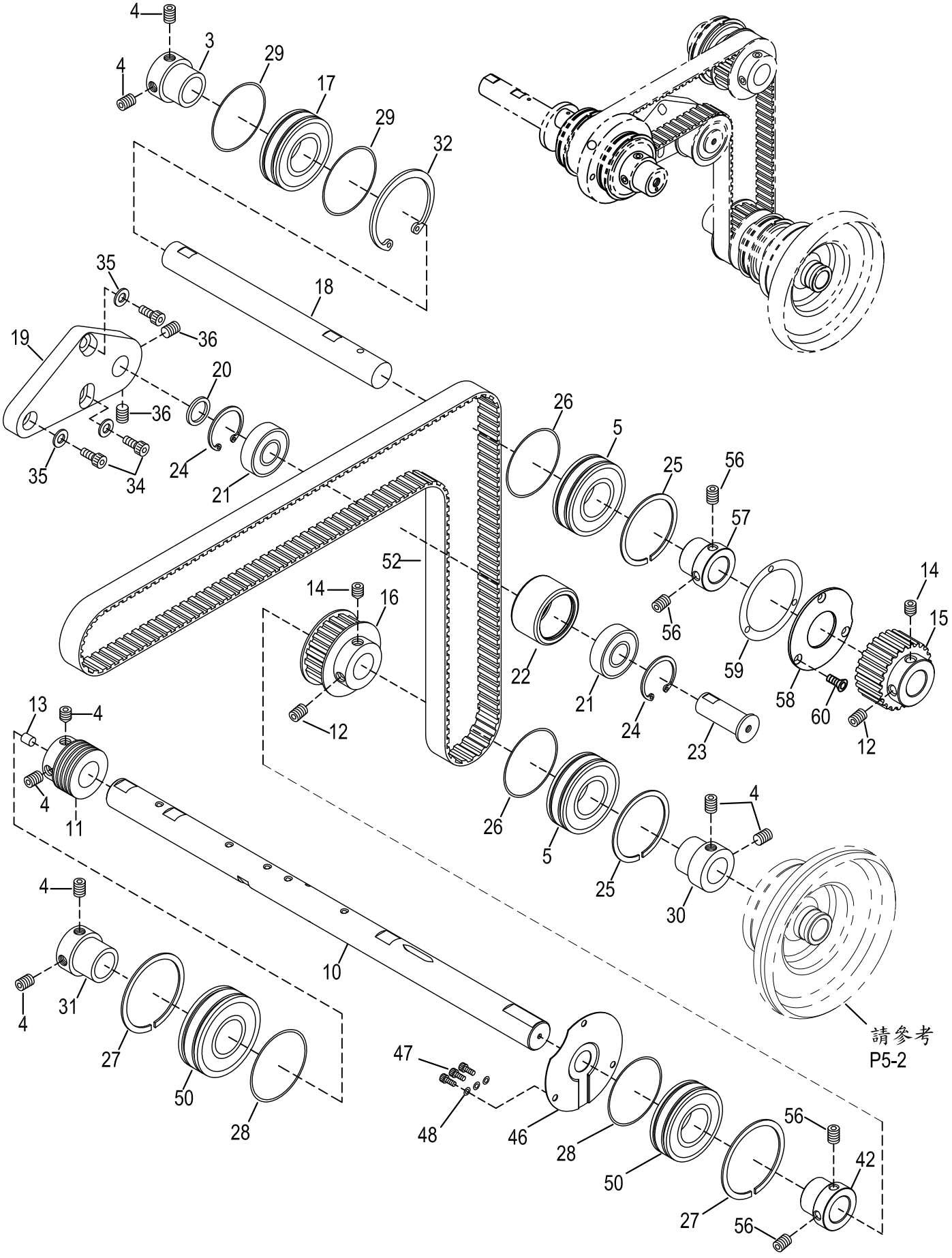
4
3
29
17
29
32
4
35
18
19
36
20
36
35
34
24
21
26
5
25
56
57
52
14
16
56
14
15
22
21
24
23
59
58
60
12
12
13
4
4
11
26
5
25
4
30
4
10
4
31
27
50
28
47
48
46
28
50
27
56
42
56
請參考
P5-2

Ref. No.	Parts No.	Description	產品名稱	Amt. Req.
41				
42	L0542	Adapter	培林轉接器	1
43				
44				
45				
46	L0546	Oil Differender	檔油板	1
47	SF224	Screw (M4 - 0.7 × 8)	螺絲	3
48	WF04-1	Washer	墊片	3
49				
50	L0550	Ball Bearing(ϕ 47 x ϕ 20 - 6204RZ)	培林	2
51				
52	LL0552-2	Timing Belt	皮帶	1
53				
54				
55				
56	SV250	Screw(M5-0.8×5)	螺絲	4
57	L0557	Adapter	培林轉接器	1
58	L0558-1	Gasket	防油墊圈	1
59	L0226-1	Bearing Cover(Smail) Gasket	止油墊片	1
60	SV228	Screw (M4 - 0.7 × 6.3)	螺絲	3

＊Ref. No. 1 to 40 ・・・・・See the preceding page.

5-2

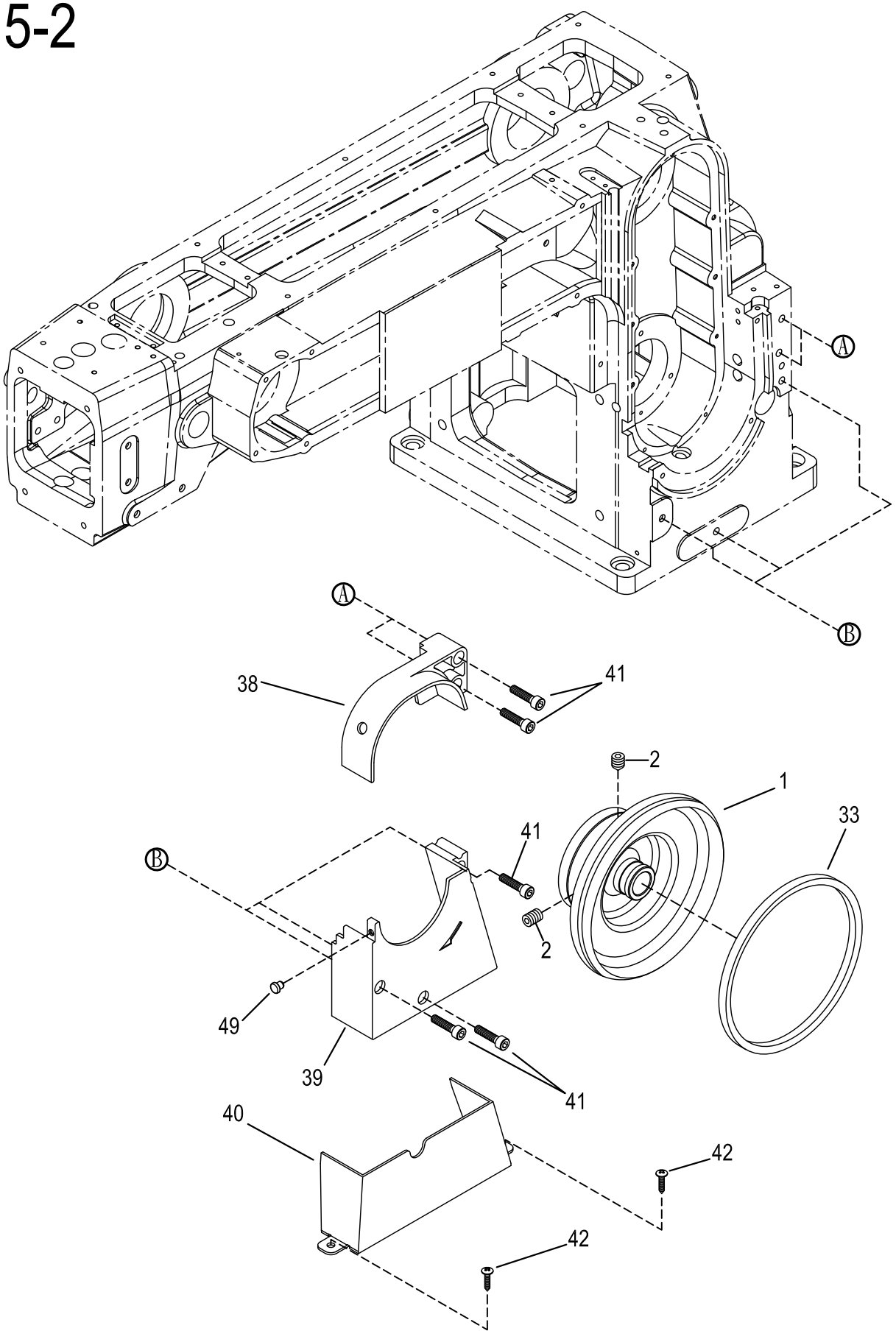

Ref. No.	Parts No.	Description	產品名稱	Amt . Req .
1	L0501-2	Pulley(Optional)	手輪(選配)	1
2	SF241	Screw(M6-1×10)	螺絲	2
33	L0533-1	O-ring	耐油橡膠	1
38	L0538	Belt Cover (Upper)	皮帶蓋(上)	1
39	L0539	Belt Cover (Lower)	皮帶蓋(下)	1
40	L0540	Belt Guard	皮帶安全蓋	1
41	SF243	Screw(M6-1.0×25)	螺絲	5
42	15-24	Wooden Screw	木螺絲	2
49	L0549	Seal Plug	膠塞	1

6

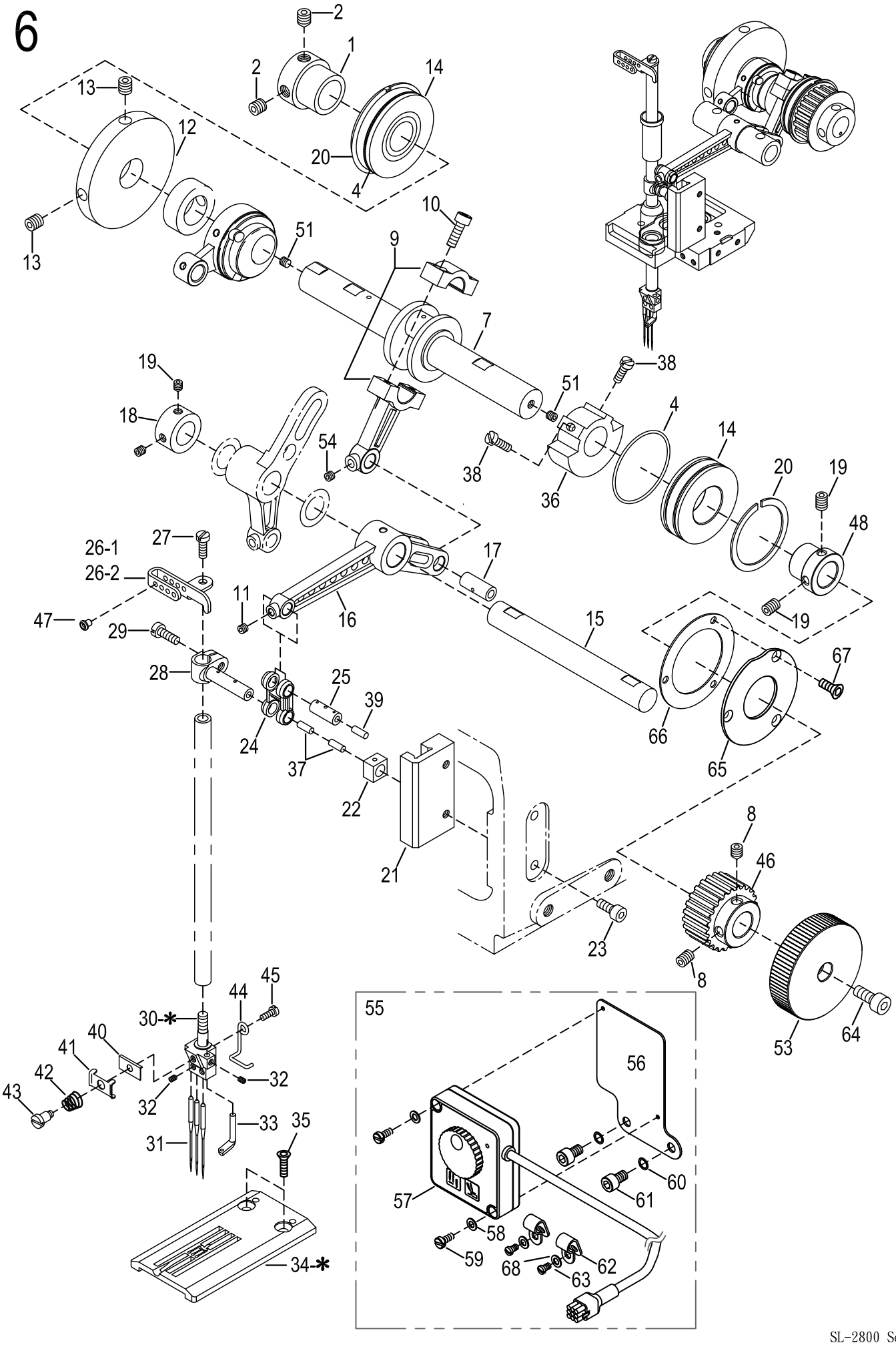

2
1
2
14
13
12
20
4
13
10
51
9
7
19
38
51
18
4
54
14
38
20
19
36
48
27
26-1
26-2
17
11
16
47
29
15
19
28
25
67
39
24
66
37
65
22
8
21
46
23
8
45
44
30-*
40
41
42
43
32
32
33
35
31
34-*
55
56
60
61
57
58
59
68
62
63

NEEDLE BAR DRIVING MECHANISM 針棒機構 6

Ref. No.	Parts No.	Description	產品名稱	Amt. Req.
1	L0503	Adapter	培林轉接器	1
2	SV260	Screw(M6-1×5)	螺絲	2
3				
4	L0526	Oil Seal	油封	2
5				
6	GE11-6	Ball Bearing	滾珠培林	1
7	L0607-9	Needle Bar Driving Shaft	針棒曲軸	1
8	SV264	Screw(M6-1.0×8)	螺絲	2
9	L0609	Needle Bar Connecting Rod	針棒連桿	1
10	SV223	Screw(M4-0.7×14)	螺絲	2
11	MFR050	Screw(M4-0.7×5)	螺絲	1
12	L0612-1	Counterweight	配重凸輪	1
13	SF241	Screw(M6-1×10)	螺絲	2
14	L0505	Ball Bearing(42×20)	滾珠培林	1
15	L0615	Needle Bar Rocking Shaft	針棒搖擺軸	1
16	L0616	Needle Bar Driving Lever	針棒曲柄	1
17	L0617	Driving Lever Pin	銷	1
18	L0618	Collar(12×20×10mm)	定位環	1
19	SV250	Screw(M5-0.8×5)	螺絲	4
20	L0525	Retaining Ring	止動環	2
21	L0621	Needle Bar Guide	針棒導塊	1
22	L0622-1	Slide Block	滑塊	1
23	SF225	Screw(M4-0.7×10)	螺絲	2
24	L0624	Needle Bar Connecting Link	針棒連結器	1
25	L0625	Needle Bar Connecting Link Pin	連接銷	1
26-1	L0626	Needle Bar Thread Eyelet(Optional)	針棒過線片(選配)	1
26-2	L0626-2	Needle Bar Thread Eyelet(Optional)	針棒過線片(選配)	
27	SF114	Screw(SM 9/64-40×7.5)	螺絲	1
28	L0628	Needle Bar Bracket	針棒驅動架	1
29	SV232	Screw(M4-0.7×10)	螺絲	1
30-*	-	Needle Clamp(Optional)	針鎦(以下選購)	
30-1	L0630-240	Needle Clamp(240)(Optional)	針鎦(2針4.0)(選購)	
30-2	L0630-248	Needle Clamp(248)(Optional)	針鎦(2針4.8)(選購)	
30-3	L0630-348	Needle Clamp(348)(Optional)	針鎦(3針4.8)(選購)	
30-4	L0630-356-2	Needle Clamp(356)(Optional)	針鎦(3針5.6)(選購)	
30-5	L0630-360	Needle Clamp(360)(Optional)	針鎦(3針6.0)(選購)	1
30-6	L0630-364	Needle Clamp(364)(Optional)	針鎦(3針6.4)(選購)	
30-7	L0630-452	Needle Clamp(452)(Optional)	針鎦(4針5.2)(選購)	
30-8	L0630-4601	Needle Clamp(460)(Optional)	針鎦(4針6.0)(選購)	
30-9	L0630-464	Needle Clamp(464)(Optional)	針鎦(4針6.4)(選購)	
31	TVx7	Needle	針	3
32	SF106	Screw(SM 1/8-44×2.8)	螺絲	4
33	L0633-1	Top Cover Thread Eyelet	上飾線過線桿	1

＊ Ref. No. 34 to 68 ・・・・・See the following page

6

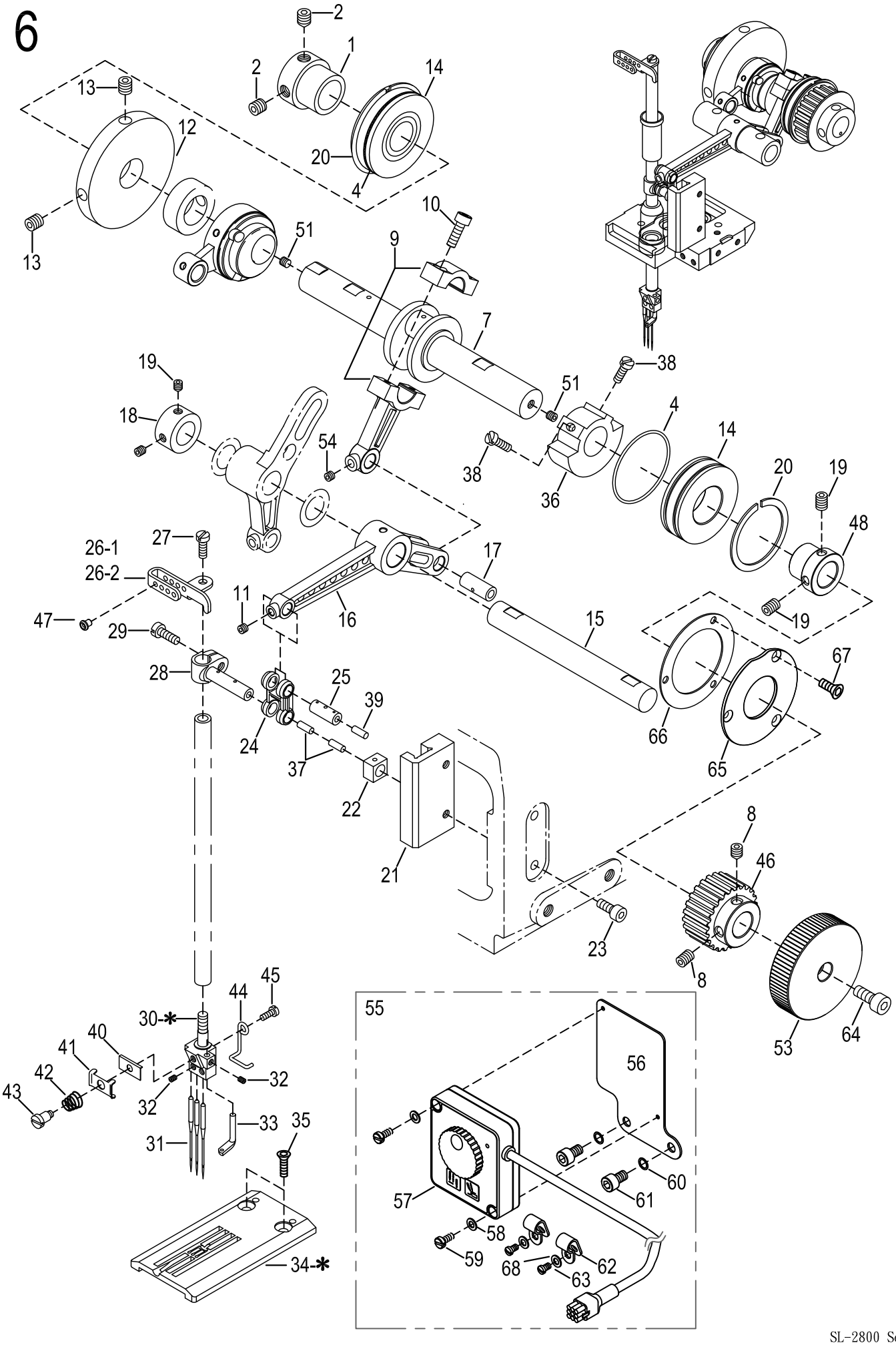

2
1
2
14
13
12
20
4
13
10
51
9
7
19
38
51
18
4
54
14
38
20
19
36
48
27
26-1
26-2
17
11
16
47
29
15
19
28
25
67
39
24
66
37
65
22
8
21
46
23
8
45
44
30-*
40
41
42
43
32
32
33
35
31
34-*
55
56
60
61
57
58
59
68
62
63
53
64

Ref. No.	Parts No.	Description	產品名稱	Amt. Req.
34-*	-	Stitch Plate(Standard) (Without EWT/AWT/AST)	針板(以下標準用)	
34-1	L0634-2403	Stitch Plate(240)(Folding Type)(Optional)	針板(2針4.0)(倒骨)(選購)	
34-2	L0634-2483	Stitch Plate(248)(Folding Type)(Optional)	針板(2針4.8)(倒骨)(選購)	
34-3	L0634-348	Stitch Plate(348)(Folding Type)(Optional)	針板(3針4.8)(倒骨)(選購)	
34-4	L0634-3566	Stitch Plate(356)(Folding Type)(Optional)	針板(3針5.6)(倒骨)(選購)	
34-5	L0634-3603	Stitch Plate(360)(Folding Type)(Optional)	針板(3針6.0)(倒骨)(選購)	
34-6	L0634-3641	Stitch Plate(364)(Folding Type)(Optional)	針板(3針6.4)(倒骨)(選購)	1
34-7	L0634-452	Stitch Plate(452)(Folding Type)(Optional)	針板(4針5.2)(倒骨)(選購)	
34-8	L0634-4603	Stitch Plate(460)(Folding Type)(Optional)	針板(4針6.0)(倒骨)(選購)	
34-9	L0634-4643	Stitch Plate(464)(Folding Type)(Optional)	針板(4針6.4)(倒骨)(選購)	
34-10	L0634-356S3	Stitch Plate (356)(Folding)(Needle: φ1.16)(Optional)	針板(3針5.6)(倒骨)(針 φ1.16)(選購)	
34-11	L0634-248TN	Stitch Plate(248)(Folding Type)(Light Fabric)(Optional)	針板(2針4.8)(倒骨)(薄料)(選購)	
34-12	L0634-360TN	Stitch Plate(360)(Folding Type)(Light Fabric)(Optional)	針板(3針6.0)(倒骨)(薄料)(選購)	
35	L0650Ni	Screw(M4-0.7×14) (皿型)	螺絲	2
36	VE13	Conuterweight (Small)	平衡配重凸輪	1
37	L0637	Oil Wick	油線	2
38	SV221	Screw(M4-0.7×8)	螺絲	2
39	L0639	Oil Wick	油線	1
40	VC34	Thread Retainer Disc Support	小調子板	1
41	VC35	Needle Thread Retainer Disc	針線固定片	1
42	VC36	Needle Thread Retainer Spring	彈簧	1
43	SV108-1	Screw(1/8-44×2.7)	螺絲	1
44	VG21-1	Eyelet Spring	針鎦固定線	1
45	SF205	Screw(M2.6-0.45×5)	螺絲	1
46	L0517-1	Upper Spindle Gear	上主軸齒輪	1
47	J0865-2	Ceramic Guide	陶瓷	8
48	L0557	Adapter	培林轉接器	1
49				
50				
51	SF240	Screw(M6-1×6)	螺絲	2
52				
53	L0653	Handwheel	手推輪(普通用)	1
54	MFR080	Screw(M4-0.7×8)	螺絲	1
55	LL2401-A	Electric Hand Wheel C. Set(For Thread Trimming)	電子手轉輪組(切線用選購)	1
56	LL2401	Bracket	固定座	1
57	LL021	Electric Hand Wheel	電子手轉輪	1
58	GE47	Washer	墊片	2
59	LL2404	Screw (SM1/8 - 44 × 12)	螺絲	2
60	WF06	Washer	墊片	2
61	SV266NI	Screw (M6 - 1.0 × 10)	螺絲	2
62	FL23	Plastic Clamp(1/4")	塑膠固定夾	3
63	SF224NI	Screw(M4 - 0.7 × 8)	螺絲	3
64	GK03	Screw(M6-1.0 ×14)	螺絲	1
65	L0558-1	Gasket	防油墊圈	1
66	L0226-1	Bearing Cover(Smail) Gasket	止油墊片	1
67	SV228	Screw (M4 - 0.7 × 6.3)	螺絲	3
68	WF04	Washer	墊片	2

＊Ref . No . 1 to 33 ・・・・・See the preceding page.

7

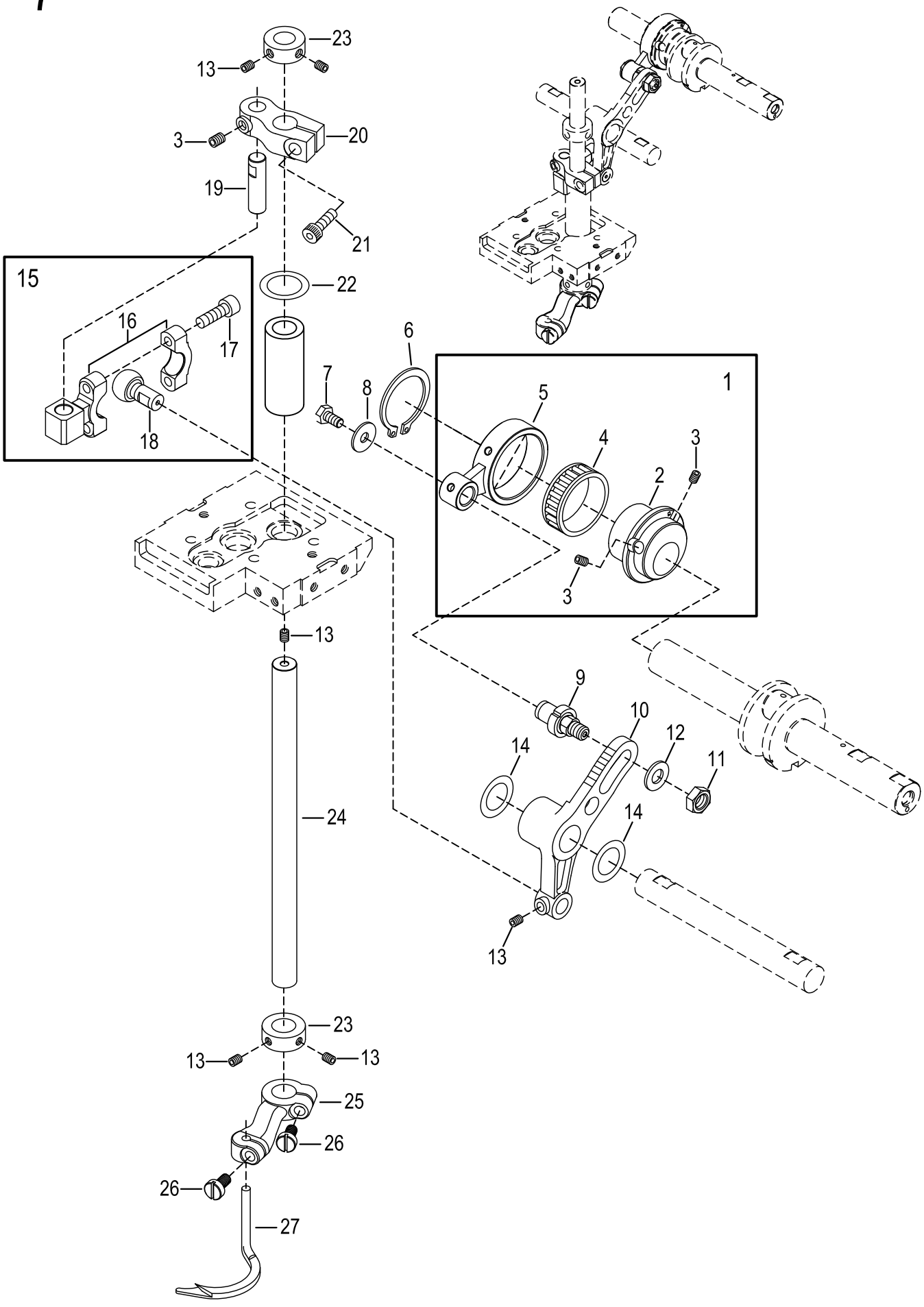
23
13
3
20
19
21
15
22
16
17
18
6
7
8
1
5
4
3
2
3
13
9
10
12
14
11
14
24
13
23
13
13
25
26
26
27

SPREADER MECHANISM　上勾針飾線機構　7

Ref. No.	Parts No.	Description	產品名稱	Amt. Req.
1	L0705-1-A	Spreader Connecting Rod, C. Set	上勾針連桿(組)	1
2	L0702-2	Spreader Eccentric	上勾針偏心輪	1
3	SV250	Screw (M5-0.8×5)	螺絲	3
4	L0704	Roller Bearing	滾針培林	1
5	L0705	Spreader Connecting Rod	上勾針連桿	1
6	VK06	Retaining Ring	扣環	1
7	SF222	Screw(M4-0.7×6)	螺絲	1
8	L0708	Washer	墊片	1
9	L0709	Adjusting Pin	調整銷	1
10	L0710-1	Spreader Driving Arm	上勾針驅動臂	1
11	NV13	Nut(M6-1.0)	螺帽	1
12	L0712	Washer	墊片	1
13	SF228	Screw(M4-0.7×4)	螺絲	6
14	L0714	Thrust Washer	止推墊片	2
15	L0715	Spreader Link, C. Set	上勾針連接珠軸(組)	1
16	L0716	Spreader Link	上勾針連接珠軸	1
17	SV223	Screw(M4-0.7×14)	螺絲	2
18	L0718	Spreader Ball	上勾針珠子	1
19	L0719	Pin	銷	1
20	L0720-1	Spreader Rocking Arm	上勾針擺動臂	1
21	SV253	Screw(M5-0.8×16)	螺絲	1
22	L0722	Thrust Washer	止推墊片	1
23	GK27	Collar(10×17×8mm)	定位環	2
24	L0724	Spreader Shaft	上勾針棒	1
25	VI24	Spreader Holder	上勾針座	1
26	SV222	Screw(M4-0.7×12)	螺絲	2
27	VI25	Spreader	上勾針	1

8

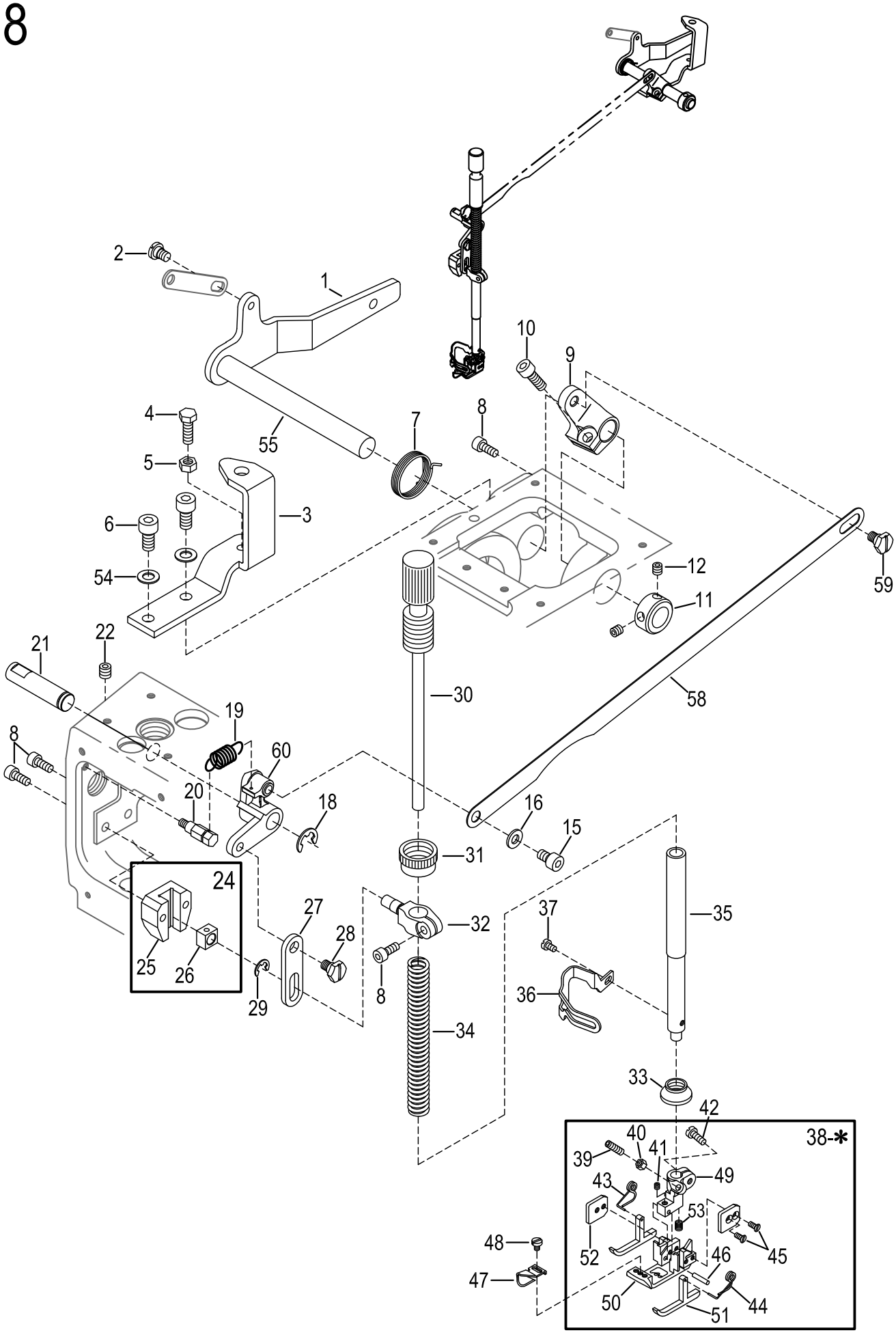

1
2
3
4
5
6
7
8
9
10
11
12
15
16
18
19
20
21
22
24
25
26
27
28
29
30
31
32
33
34
35
36
37
38-*
39
40
41
42
43
44
45
46
47
48
49
50
51
52
53
54
55
58
59
60

Ref. No.	Parts No.	Description	產品名稱	Amt. Req.
1	L0801-1	Lifter Lever	提升桿	1
2	L0802	Screw(M5-0.8*5.1)	螺絲	1
3	L0803	Lifter Lever Stopper	提升檔片	1
4	GW07	Screw(M5-0.8×15)	螺絲	1
5	NV12	Nut	螺帽	1
6	GL16Ni	Screw(M6-1×12)	螺絲	2
7	L0807	Spring	彈簧	1
8	SF225Ni	Screw(M4-0.7×10)	螺絲	4
9	L0809	Lifter Shaft Lever	提升曲柄	1
10	SF231	Screw(M5-0.8×14)	螺絲	1
11	L0618	Collar(12×20×10mm)	定位環	1
12	SV250	Screw(M5-0.8×5)	螺絲	2
13				
14				
15	SV251	Screw(M5-0.8×8)	螺絲	1
16	GJ08	Washer	墊片	1
17				
18	L0818	Retaining Ring	扣環	1
19	L0819	Return Spring	彈簧	1
20	L0820	Spring Hanger	彈簧掛棒	1
21	L0821	Lifter Pin	提升銷	1
22	SF240	Screw(M6-1×6)	螺絲	1
23				
24	L0824	Presser Bar Guide, C. Set	押腳棒導塊(組)	
25	L0825	Presser Bar Guide	押腳棒導塊	1
26	L0622-1	Slide Block	滑塊	1
27	L0827	Lifter Link	連動片	1
28	L0828	Screw(M5-0.8×5)	螺絲	1
29	L0829	Retaining Ring	扣環	1
30	L0830	Presser Spring Regulator	壓力調節棒	1
31	L0831	Lock Nut	固定螺帽	1
32	L0832	Presser Bar Connecting Bracket	押腳固定臂	1
33	L0833	Oil Diffender Rubber	止油膠圈	1
34	L0834	Presser Bar Spring	彈簧	1
35	L0835-1	Presser Bar	押腳棒	1
36	L0836	Finger Guard	手指護罩	1
37	SV215	Screw(M3-0.5×5)	螺絲	1
38-*	-	Presser Foot, C. Set(Optional)	押腳(組)(以下選購)	
38-1	VH240	Presser Foot, C. Set(240)(Optional)	押腳(組)(選購)	
38-2	VH248	Presser Foot, C. Set(248)(Optional)	押腳(組)(選購)	
38-3	VH348	Presser Foot, C. Set(348)(Optional)	押腳(組)(選購)	
38-4	VH356-A1	Presser Foot, C. Set(356)(Optional)	押腳(組)(選購)	1
38-5	VH360	Presser Foot, C. Set(360)(Optional)	押腳(組)(選購)	
38-6	VH364	Presser Foot, C. Set(364)(Optional)	押腳(組)(選購)	
38-7	VH460	Presser Foot, C. Set(460)(Optional)	押腳(組)(選購)	
38-8	VH464	Presser Foot, C. Set(464)(Optional)	押腳(組)(選購)	
39	SV109	Screw(SM1/8-44×10)	螺絲	1
40	NV11	Nut	螺帽	1

＊ Ref. No. 41 to 60 ・・・・・See the following page

8

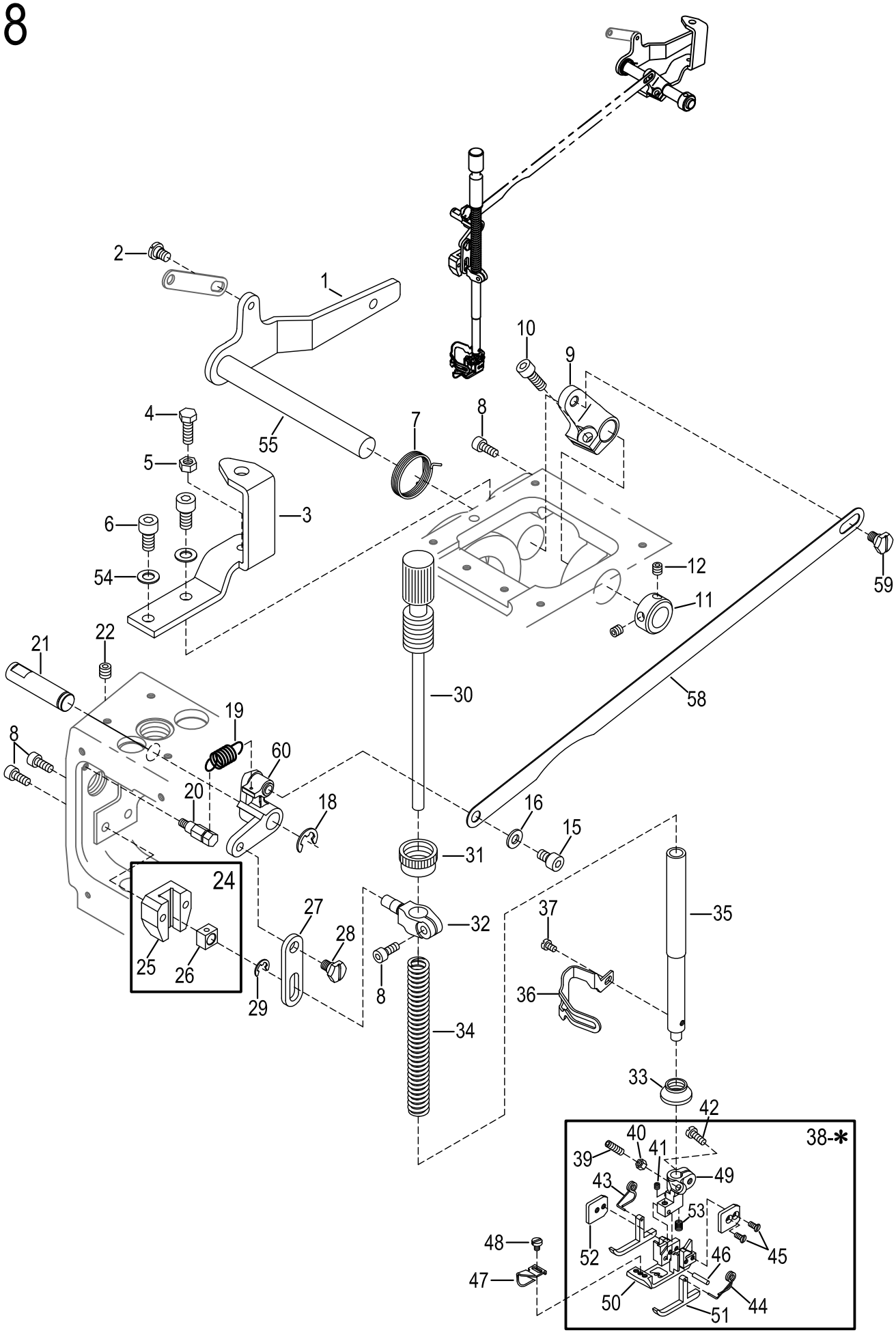

1
2
3
4
5
6
7
8
9
10
11
12
15
16
18
19
20
21
22
24
25
26
27
28
29
30
31
32
33
34
35
36
37
38-*
39
40
41
42
43
44
45
46
47
48
49
50
51
52
53
54
55
58
59
60

PRESSER FOOT MECHANISM 押腳機構 8

Ref. No.	Parts No.	Description	產品名稱	Amt. Req.
41	SF106	Screw(SM1/8-44×2.8)	螺絲	1
42	SF116	Screw(SM9/64×9)	螺絲	1
43	VH16	Presser Foot Spring(Left)	押腳彈簧(左)	1
44	VH24	Presser Foot Spring(Right)	押腳彈簧(右)	1
45	SV103	Screw(SM3/32-56×5)	螺絲	4
46	VH20	Pin	銷	1
47	VH26	Fabric Guide	導布器	1
48	SV206	Screw(M2.5-0.45×3.5)	螺絲	1
49	VH54	Upper Presser Foot	壓腳頭	1
50	VH55	Lower Presser Foot	壓腳底	1
51	VH53	Left Guide Foot	T行船導片	2
52	VH52	Fixed Plate	方形固定片	2
53	VH21	Presser Foot Spring	彈簧	1
54	WF06	Washer	墊片	2
55	L0855-2	Main Shaft	主軸	1
56				
57				
58	LL0858	Lifter Connecting Plate	提升連桿	1
59	LL0859	Screw(M5-0.8×5)	螺絲	1
60	LL0860	Lifter Link Lever	提升吊柄	1

＊Ref. No. 1 to 40 ・・・・・See the preceding page.

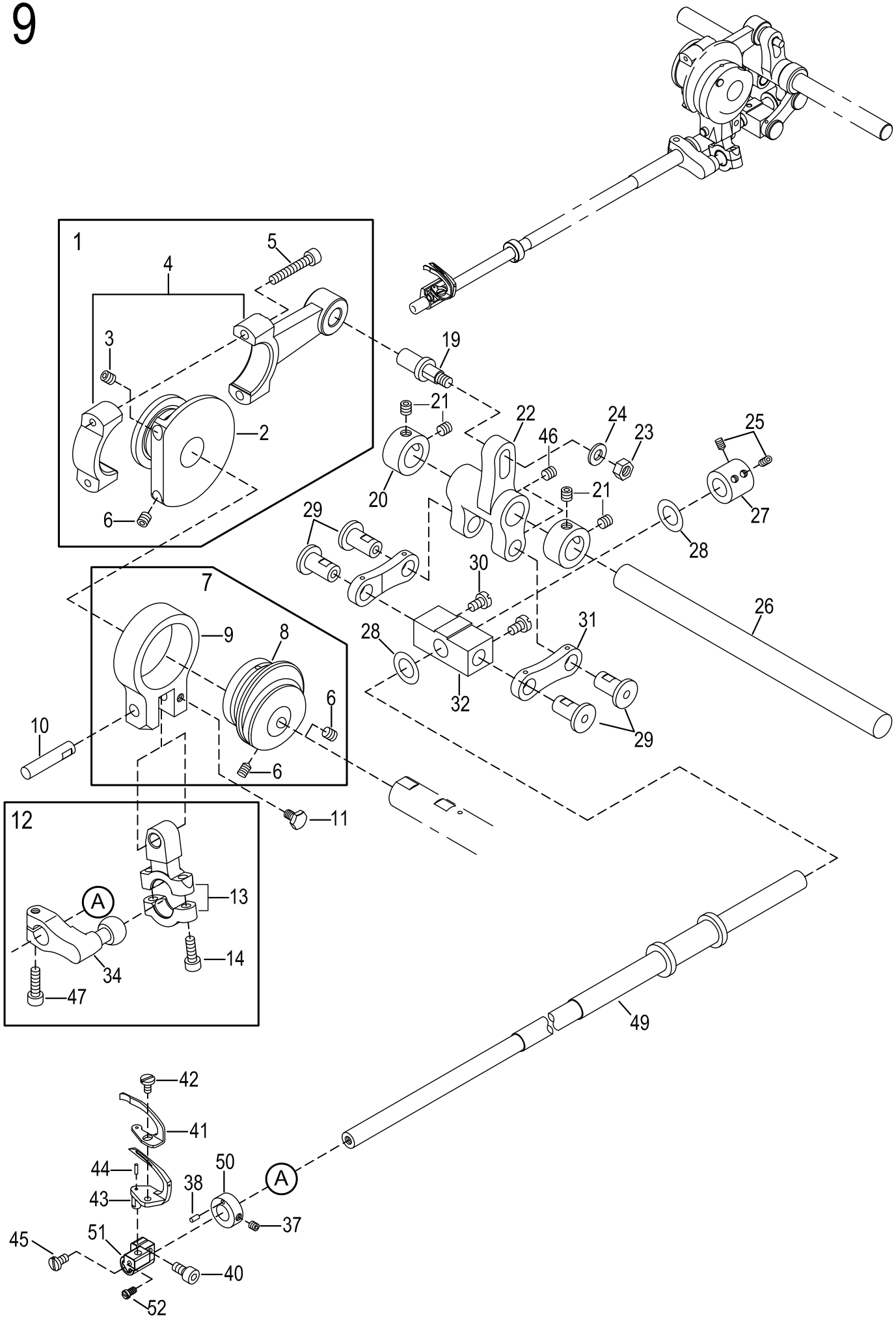
1
2
3
4
5
6
7
8
9
10
11
12
13
14
19
20
21
22
23
24
25
26
27
28
29
30
31
32
34
38
40
41
42
43
44
45
46
47
49
50
51
52
A
A

Ref. No.	Parts No.	Description	產品名稱	Amt. Req.
1	L0901	Looper Rocker Connecting Rod, C. Set	下勾針搖臂連桿(組)	1
2	L0902	Looper Rocker Eccentric	下勾針搖臂偏心輪	1
3	L0903	Screw(M5-0.8×8)	螺絲	1
4	L0904	Looper Rocker Connecting Rod	下勾針搖臂連桿	1
5	SV236	Screw(M4-0.7×25)	螺絲	2
6	GL12ET	Screw(M5-0.8×8)	螺絲	3
7	L0907	Looper Connecting Rod, C. Set	下勾針傳動桿(組)	1
8	L0908	Looper Eccentric	偏心輪	1
9	L0909-3	Looper Connecting Rod	下勾針傳動桿	1
10	L0910	Pin	銷	1
11	SF222	Scerw(M4-0.7×6)	螺絲	1
12	L0912	Looper Lever Link, C.Set	下勾針連動珠軸(組)	1
13	L0913	Looper Lever Link	下勾針連動珠軸	1
14	L0914	Screw(M4-0.7×12)	螺絲	2
19	L0919-1	Connecting Rod Pin	銷	1
20	L0618	Collar(12×20×10mm)	定位環	2
21	SV250	Screw(M5-0.8×5)	螺絲	4
22	L0922	Looper Rocker Shaft Lever	下勾針擺動曲柄	1
23	NV12	Nut	螺帽	1
24	GJ08	Washer	墊片	1
25	SF228	Screw(M4-0.7×4)	螺絲	4
26	L0926-1	Looper Rocker Shaft	下勾針擺動軸	1
27	L0927	Collar(9×16×14mm)	軸套	1
28	L0928	Thrust Ring	止推墊片	2
29	L0929	Pin	銷	4
30	SV221	Screw(M4-0.7×8)	螺絲	2
31	L0931	Looper Rocker Connecting Link	擺動連接片	2
32	L0932	Looper Shaft Joint	勾針軸連接塊	1
34	L0934	Looper Driveng Ball	驅動珠子	1
37	L0937	Screw(M3.5-0.6×3)	螺絲	1
38	L0938	Pin	銷	1
40	SF225	Screw(M4-0.7×10)	螺絲	1
41	L0941	Needle Guard(Front)	頂針片(前)	1
42	SV215	Screw(M3-0.5×5)	螺絲	1
43	L0943-4	Looper	勾針	1
44	L0944	Pin	銷	1
45	L0945-2	Screw(M4-0.7×8)	螺絲	1
46	SV227	Screw(M4-0.7×5)	螺絲	2
47	SV223	Screw(M4-0.7×14)	螺絲	1
49	LL0949-1	Looper Shaft	下勾針驅動軸	1
50	LL0950	Collar(8×15×5.6mm)	定位環	1
51	LL0951	Looper Holder	下勾針座	1
52	MEA060	Screw(M3.5×0.6×6)	螺絲	1

10

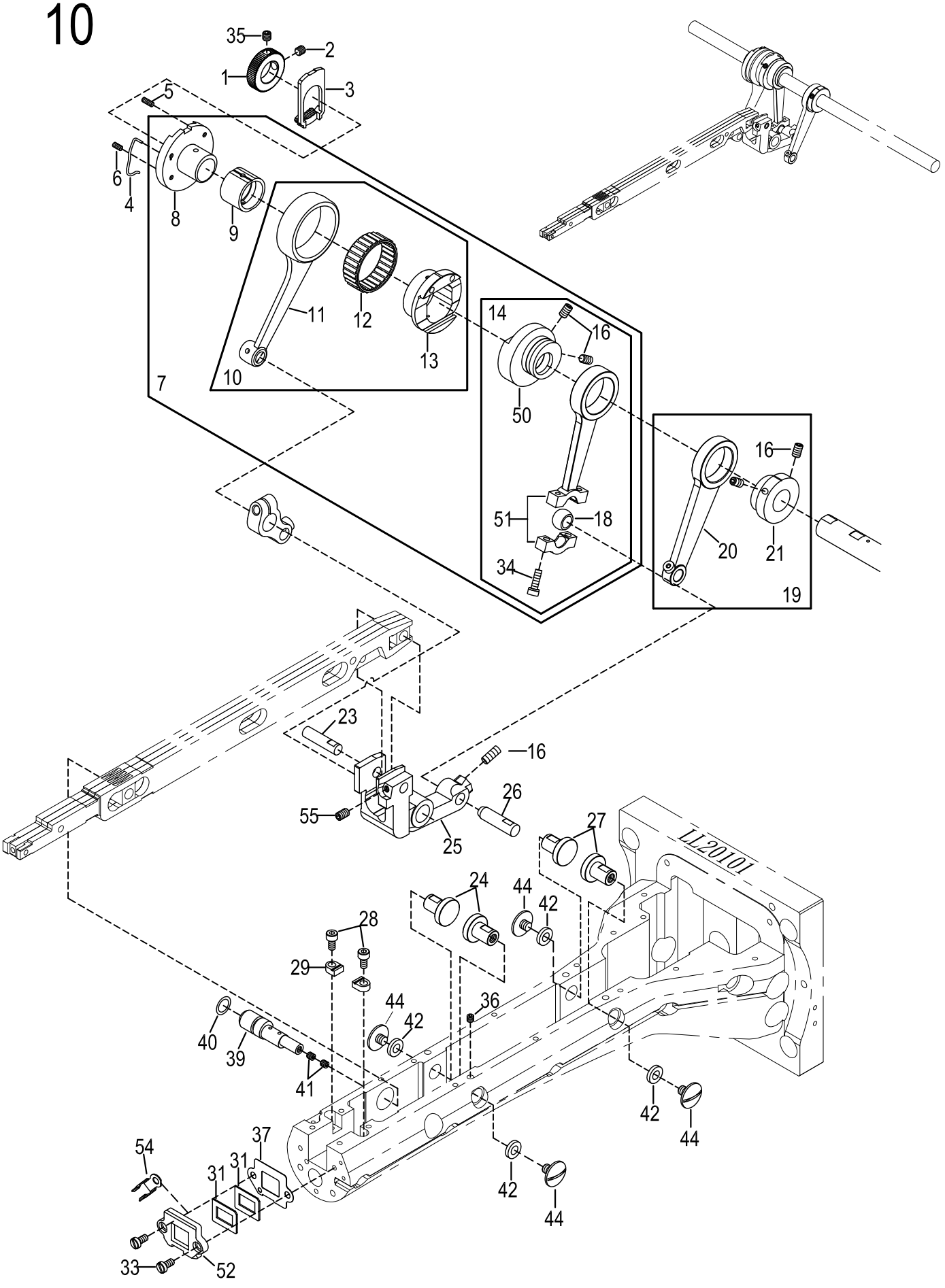
35
2
1
3
5
6
4
8
9
11
12
13
10
7
14
16
50
51
18
34
20
21
19
23
55
25
26
27
LL20101
24
44
42
28
29
36
40
39
41
37
54
31
33
52

FEED DRIVING MECHANISM(1) 送料機構(1) 10

Ref. No.	Parts No.	Description	產品名稱	Amt. Req.
1	L1001	Feed Dog Regulating Gear	送料調節齒輪	1
2	SV250	Screw(M5-0.8×5)	螺絲	1
3	L1003	Feed Dog Regulating Plate	送料調節片	1
4	L1004	Feed Dog Regulating Plate Spring	彈簧	1
5	GL24	Screw(M3-0.5×3.5)	螺絲	2
6	L1006	Screw(M3-0.5×6)	螺絲	1
7	L1007	Feed Regulator, C. Set	送料調整器(組)	1
8	L1008-1	Feed Dog Regulating Eccentric	調節偏心輪	1
9	L1009-1	Eccentric Link	偏心環	1
10	L1010	Feed Bar Connecting Rod, C.Set	送料連桿(組)	1
11	L1011-1	Feed Bar Connecting Rod	送料連桿	1
12	FG11	Roller Bearing	滾針培林	1
13	L1013	Feed Driving Eccentric	驅動偏心輪	1
14	L1014	Feed Lift Connecting Rod, C. Set(2)	上下送料連桿(組)	1
15				
16	GL12	Screw(M5-0.8×8)	螺絲	5
17				
18	L1018	Rod Ball	連桿珠子	1
19	L1019	Needle Guard Connecting Rod, C. Set	頂針片連桿(組)	1
20	L1020	Needle Guard Connecting Rod	頂針片連桿	1
21	L1021	Needle Guard Eccentric	頂針片偏心輪	1
22				
23	L1023	Feed Bar Block(Rear) Shaft	定位棒(後)	1
24	LL1024	Feed Bar Guide(Short)(Rear)(14.2)	送料導銷(短)(後)	2
25	LL1025-2	Feed Lift Arm	上下送料臂	1
26	L1026	Pin	銷	1
27	L1027-2	Feed Bar Guide(Long)(Rear)(16)	送料導銷(長)(後)	2
28	SF225	Screw(M4-0.7×10)	螺絲	2
29	L1029-1	Feed Bar Guide(Front)	送料導消(前)	2
30				
31	L1031-2	Feed Bar Shield(Front)	送料護片(前)	2
32				
33	H0214	Screw(M4-0.7×8)	螺絲	2
34	SF226	Screw(M4-0.7×12)	螺絲	2
35	GL37	Screw(M5-0.8×12)	螺絲	1
36	L1036	Screw(M5-0.8×6)	螺絲	2
37	L1037-2	Feed Bar Shield Plate	送料護板	1
38				
39	L1039	Feed Bar Block(Front) Shaft	定位棒(前)	1
40	L1133	O-ring(P9)	O型環	1
41	SF228	Screw(M4-0.7×4)	螺絲	2
42	L1042-2	Head Cover Seal Plug	膠塞	4
43				
44	J1636	Screw(11/64x40×6)	螺絲	4
45				
50	LL1050	Feed Lift Eccentric	上下送偏心輪	1
51	LL1051	Feed Lift Connecting Rod	上下送料連桿	1
52	LL1052	Feed Bar Support	送料之座	1
53				
54	LL0254	Cover Latch Spring	夾簧	1
55	P0349	Screw(M4-0.7×8)	螺絲	1

11

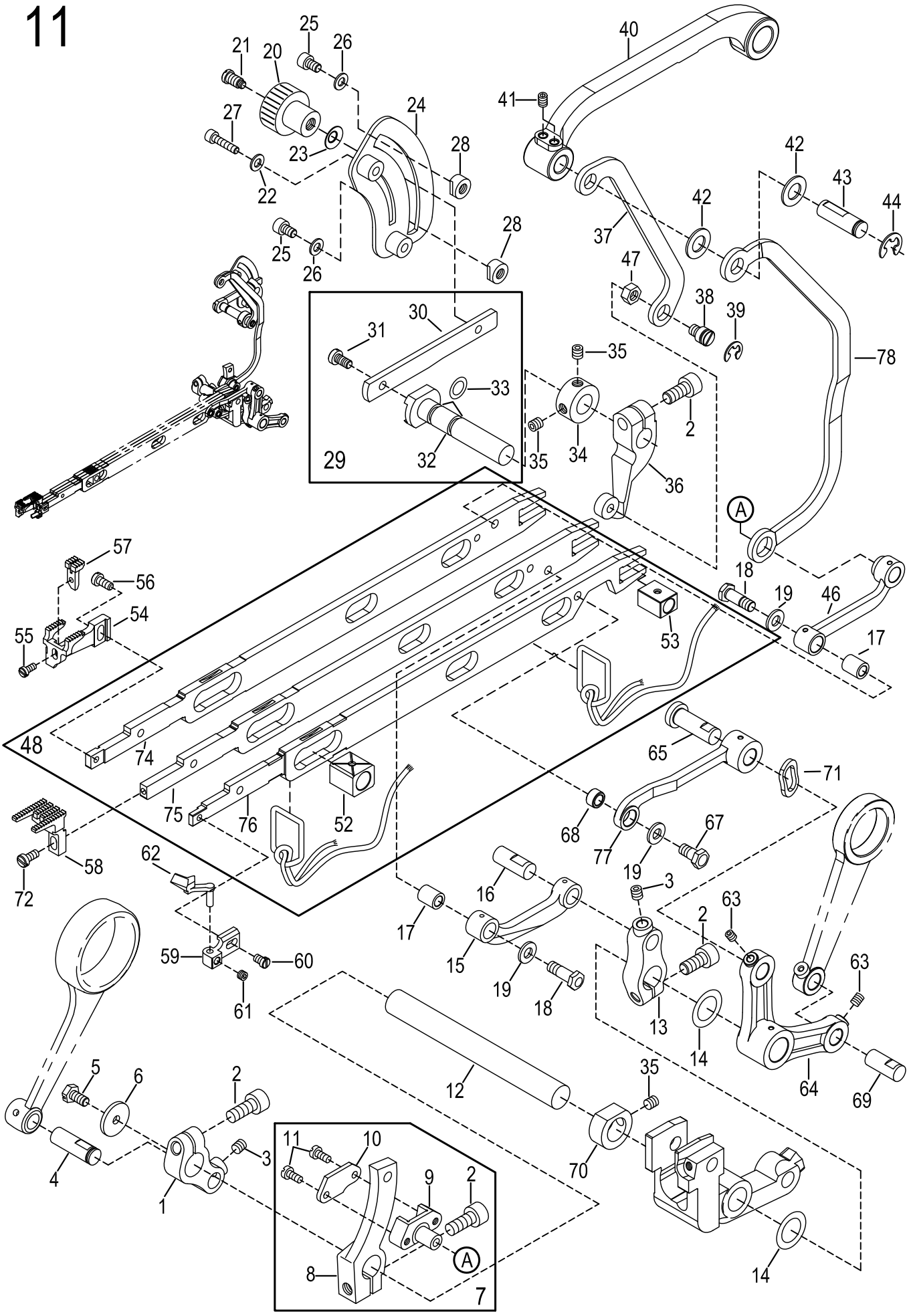

21
20
25
26
27
23
22
24
28
25
26
28
40
41
42
43
44
42
37
47
38
39
78
30
31
33
32
29
35
34
35
2
36
A
57
56
54
55
18
19
46
17
53
48
74
75
76
52
65
71
68
77
19
67
58
72
62
16
3
17
15
19
18
2
63
63
59
60
61
13
14
64
69
12
35
5
6
2
4
1
3
11
10
9
2
8
A
7
70
14

Ref. No.	Parts No.	Description	產品名稱	Amt. Req.
1	L1101	Feed Bar Driving Shaft Lever	送料驅動柄	1
2	SF244	Screw(M6-1×16)	螺絲	4
3	SF240	Screw(M6-1×6)	螺絲	2
4	L1104-1	Connecting Rod Pin	銷	1
5	GB17	Screw(M4-0.7×10)	螺絲	1
6	L1106	Thrust Plate	止推墊片	1
7	L1107	Differential Rocker, C. Set	差動搖臂(組)	1
8	LL1108	Differential Rocker	差動搖臂	1
9	L1109	Silder	滑塊	1
10	L1110-1	Silder Cap	滑塊帽	1
11	L1111	Screw(M3-0.5×10)	螺絲	2
12	L1112	Feed Bar Driving Shaft	送料傳動軸	1
13	L1113	Main Feed Bar Lever	主齒送料曲柄	1
14	L0714	Thrust Washer	止推墊片	2
15	L1115	Main Feed Bar Connection	主齒連接臂	1
16	L1116	Connecting Link Pin	銷	1
17	L1117	Connecting Bushing	套管	2
18	L1118	Screw(M5-0.5×15.4)	螺絲	2
19	GJ08	Washer	墊片	3
20	H1343	Look Nut	調整螺帽	1
21	L1121	Screw(M6-1×8.8,M4.5-0.5×3.2)	螺絲	1
22	WF04-1	Washer	墊片	2
23	L0112	Conical Spring Washer	錐形彈簧墊片	1
24	L1124	Differential Feed Graduations	差動刻度表	1
25	SV259Ni	Screw(M5-0.8×6)	螺絲	2
26	VK48	Washer	墊片	2
27	SV231Ni	Screw(M4-0.7×18)	螺絲	2
28	L1128	Differential Lever Stop	差動檔塊	2
29	L1129	Differential Lever(Left), C. Set	差動曲柄(左)(組)	1
30	L1130	Differential Lever(Left)	差動曲柄	1
31	GB37	Screw(M4-0.7×8)	螺絲	1
32	L1132-1	Differential Lever Shaft	差動軸	1
33	RF23	O-ring(P7)	O型環	2
34	L1134	Collar(10×19×9mm)	定位環	1
35	SV250	Screw(M5-0.8×5)	螺絲	3
36	L1136	Differential Lever(Right)	差動曲柄(右)	1
37	L1137	Slider Link(Short)	滑動連桿(短)	1
38	L1138-2	Silder Link Pin	連桿銷	1
39	GK13	Retaining Ring	扣環	1
40	L1140-1	Differential Arm	差動臂	1

＊ Ref. No. 41 to 78 ・・・・・See the following page

11

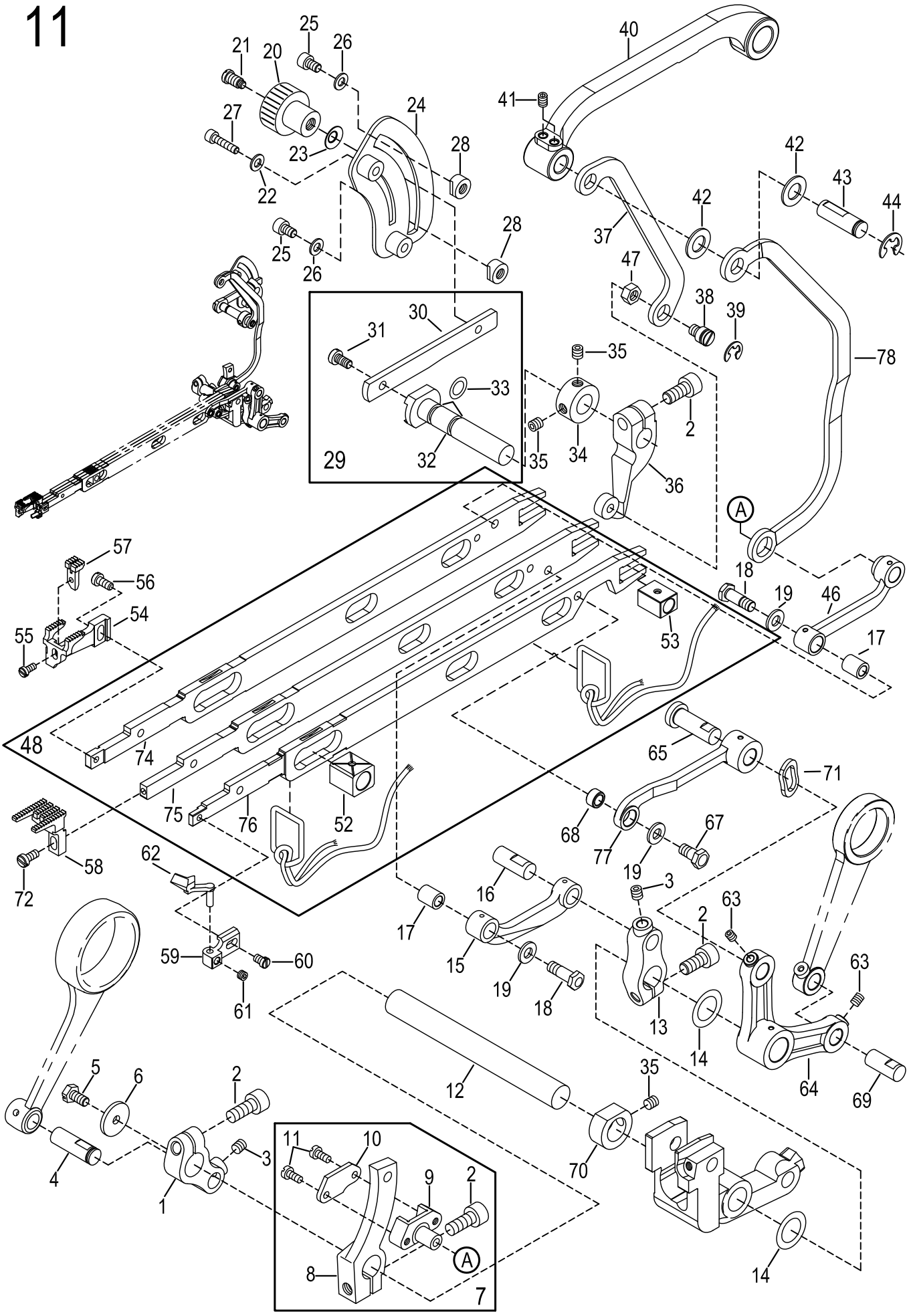

21
20
25
26
27
23
22
24
28
25
26
28
40
41
42
43
44
42
37
47
38
39
78
30
31
33
32
29
35
34
35
2
36
A
57
56
54
55
18
19
46
17
53
48
74
75
76
52
65
71
68
77
19
67
58
72
62
16
3
17
15
19
18
2
63
63
59
60
61
13
14
64
69
12
35
5
6
2
4
1
3
11
10
9
2
8
A
7
70
14

Ref. No.	Parts No.	Description	產品名稱	Amt. Req.
41	SV227	Screw(M4-0.7×5)	螺絲	2
42	L1142	Washer	墊片	2
43	L1143	Differential Arm Pin	銷	1
44	35-27	Retaining Ring (ETW-7)	扣環	1
45				
46	L1146	Differential Feed Bar Connection	差動連桿	1
47	NV12	Nut	螺帽	1
48	LL1174-4-A	Feed Bar, Complete. Set	送料具固定座組	1
49				
50				
52	L1152	Feed Lift Block(Front)	定位鍵(前)	1
53	L1153	Feed Lift Block(Rear)	定位鍵(後)	1
54	L1154-356-4	Differential Feed Dog	差動齒	1
55	SV215	Screw(M3.5-0.5×5)	螺絲	1
56	L1156-1	Screw(M3-0.6×8)	螺絲	1
57	L1157-3563	Differential Feed Dog(Middle)(240)	差動齒(小)	1
58	L1158-356-1	Main Feed Dog(240)	主動齒	1
59	L1159-1	Needle Guard(Rear) Holder	頂針片座(後)	1
60	MEA050	Screw(M3.5-0.6×5)	螺絲	1
61	SV242	Screw(M4-0.7×3)	螺絲	1
62	L1162-1	Needle Guard (Rear)	頂針片(後)	1
63	SF228	Screw(M4-0.7×4)	螺絲	2
64	L1164	Needle Guard Lever	頂針片曲柄	1
65	L1165-1	Pin	銷	1
66				
67	L1167	Screw(M5-0.5×5.4)	螺絲	1
68	L1168	Connection Bushing	連接套管	1
69	L1169	Needle Guard Lever Pin	頂針曲柄銷	1
70	L1170-1	Collar(12×20×8mm)	定位環	1
71	L1171	Wave Washer	波浪華司	1
72	SV310	Screw(M3-0.6×8)	螺絲	1
74	LL1174-4	Differential Feed Bar	差動齒驅動座	1
75	LL1175-2	Main Feed Bar	主動齒驅動座	1
76	LL1176-2	Needle Guard Bar	頂針驅動座	1
77	LL1177-3	Needle Guard Bar Connection	頂針連接棒	1
78	LL1178	Slider Link(Long)	滑動連桿(長)	1

＊Ref. No. 1 to 40 ・・・・・See the preceding page.

12

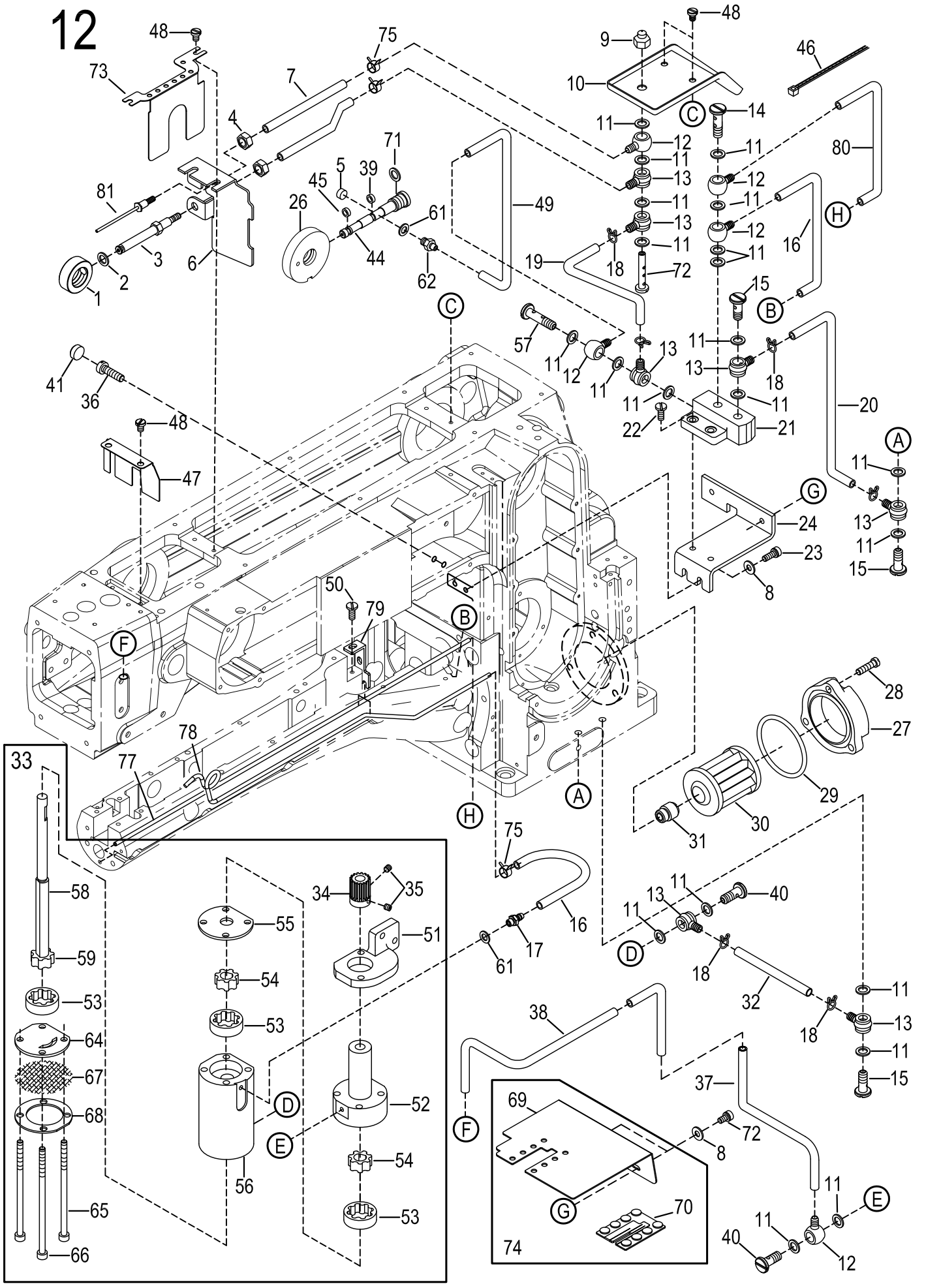

48
73
75
7
4
71
5
39
45
26
61
81
3
6
44
62
2
1
49
9
10
46
14
11
12
13
80
16
H
19
18
72
15
B
C
57
20
41
36
47
22
21
A
G
24
23
8
50
79
F
28
27
29
30
31
78
77
33
58
59
53
64
67
68
65
66
55
54
56
34
35
51
52
E
D
75
16
17
61
40
32
38
37
69
70
74

Ref. No.	Parts No.	Description	產品名稱	Amt. Req.
1	L1201	Oil Sleeve	聚油套環	1
2	L1202	O-ring(P3)	O型環	1
3	L1203	Oil Pipe(Short)	給油管	1
4	NV13	Nut	螺帽	2
5	L1205	Alumiunm Seal Plug	鋁封塞	1
6	L1206-1	Oil Differender	檔油片	1
7	L1207	Oil Tube(φ3×φ5×370L)	油管	2
8	WF04-1	Washer	墊片	4
9	L1209	Nozzle	噴油嘴	1
10	L1210	Oil Receiver	聚油盤	1
11	VM37	Washer	墊片	21
12	L1212	Oil Tube Fitting One Way End	單向接頭	5
13	VM29	Tube Joint	油管接頭	7
14	L1214	Fitting Stud(Long)	螺樁(長)	1
15	SV263	Fitting Stud(Short)	螺樁(短)	3
16	L1216	Oil Tube(φ2.9×φ5×250L)	油管	2
17	L1217	Pipe Joint	油管接頭	1
18	VM35	Oil Tube Clamp	油管夾	6
19	L1219	Oil Tube(φ4×φ6×200L)	油管	1
20	L1220	Oil Tube(φ4×φ6×270L)	油管	1
21	L1221-2	Lubricating Block	給油檔塊	1
22	SV232	Screw(M4-0.7×10)	螺絲	2
23	SF225	Screw(M4-0.7×10)	螺絲	2
24	L1224	Lubricating Block Support	檔塊架	1
25				
26	L1226-6	Oil Sleeve	聚油套環	1
27	FL19	Oil Filer Cap	濾油蓋	1
28	LL1228	Screw(SM11/64-40×14)	螺絲	3
29	RF28	O-ring(P42)	O型油環	1
30	FL20	Oil Filter	濾油器	1
31	FL21	Filter Housing	濾油器接頭	1
32	L1232	Oil Tube(φ4×φ6×140L)	油管	1
33	L1233	Oil Pump, C. Set	油泵(組)	1
34	L1234	Worm Gear	油泵蝸齒	1
35	SF228	Screw(M4-0.7×4)	螺絲	3
36	SF231	Screw(M5-0.8×14)	螺絲	2
37	L1237	Oil Tube(φ3×φ5×700L)	油管	1
38	L1238-1	Arm Draining Pipe	排油管	1
39	L1239	O-ring	O型油環	1
40	L1240	Fixed Bolt	固定螺栓	2

＊ Ref. No. 41 to 81 ・・・・・See the following page

12

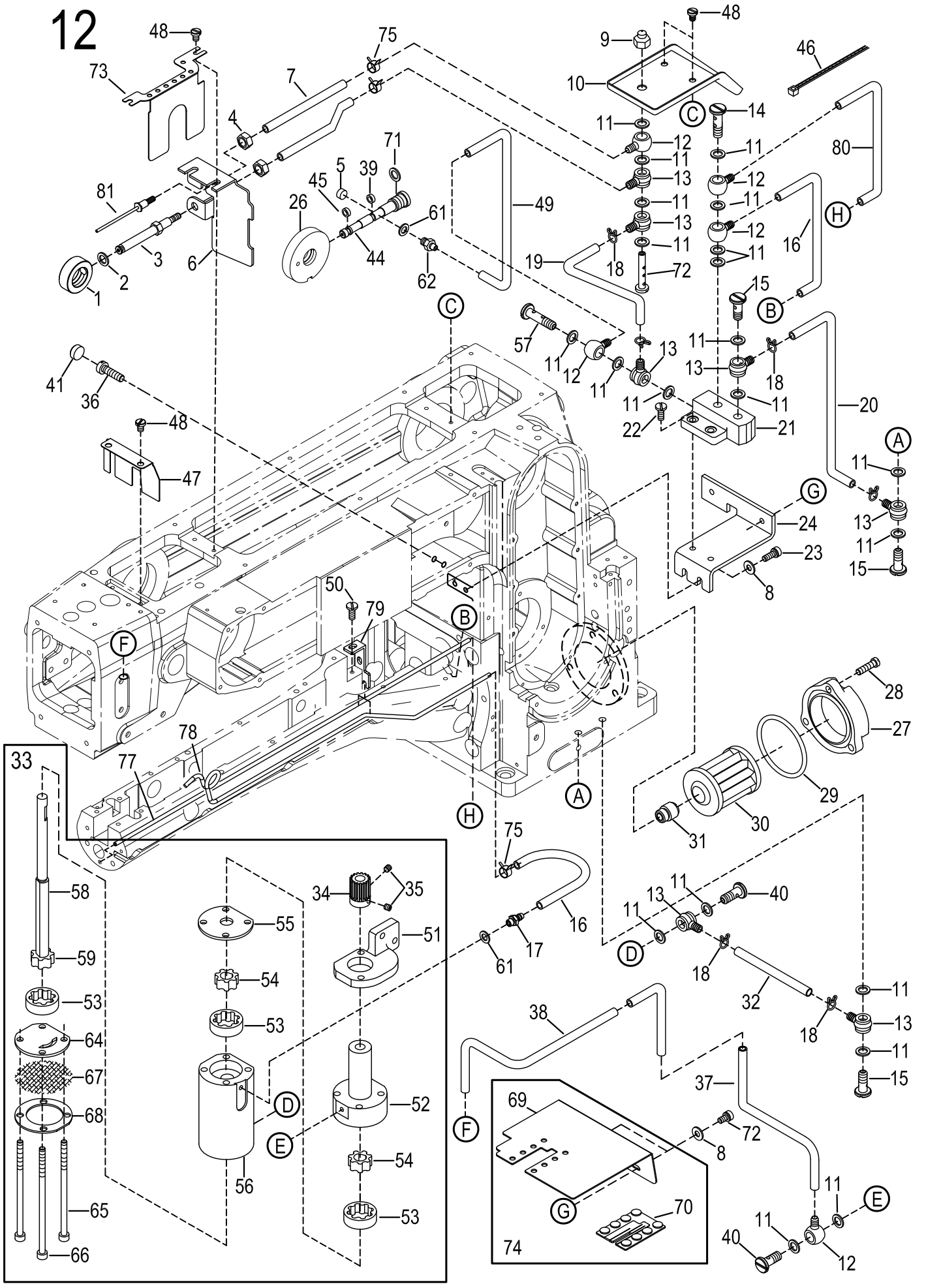

48
73
75
7
4
71
5
39
45
26
61
81
3
6
44
62
2
1
49
9
10
46
14
11
12
13
80
16
H
19
18
72
15
B
C
57
20
41
36
47
22
21
A
G
24
23
8
50
79
F
28
27
29
30
31
78
77
33
58
59
53
64
67
68
65
66
55
54
56
34
35
51
52
17
16
40
D
32
38
37
69
70
74
E

Ref. No.	Parts No.	Description	產品名稱	Amt. Req.
41	L1241	Seal Plug	膠塞	2
44	L1244-4	Oil Pipe	給油管	1
45	L1245-1	O-ring	O型環	1
46	H1447	Wrapping Band(3.2×90)	束帶	1
47	L1247-2	Needle Bar Oil Differender	針棒軸防油片	1
48	GJ36	Screw(M4-0.7×5.8)	螺絲	6
49	L1249	Main Shaft Oil Diffender Rubber	防油橡膠	1
50	SF224	Screw(M4-0.7×8)	螺絲	3
51	L1251	Oil Pump Driving Worm Gear	油泵驅動蝸齒	1
52	L1252	Pump Upper Base	油泵主體	1
53	L1253	Outer Gear	外輪子(厚 7.5mm)	3
54	L1254	Inner Gear	內輪子(厚 7.5mm)	2
55	L1255	Pump Base Washer	油泵座墊片	1
56	L1256	Pump Lower Base	油泵下層	1
57	L1257-1	Fitting Stud(Long)	螺樁	1
58	L1258	Center Shaft	油泵主軸	1
59	L1259	Inner Gear	內輪子(厚 7.5mm)	1
61	FL14	Seal	紅墊片	2
62	FL15	Oil Tube (Long), Complete Set	油嘴	1
64	L1264	Lower Base Washer	油泵底座墊片	1
65	L1265	Screw (M4-0.7×80)	螺絲	2
66	L1266	Screw (M4-0.7×90)	螺絲	2
67	VM40-8	Oil Filter	油承濾網	1
68	VM40-9	Fiter Plate	固定濾網環	1
69	L1269-1	Oil Release Plate	導油板	1
70	L1270-1	Rubber Cusion	橡膠	1
71	L1133	O-ring	O型油環	1
72	L1272	Fitting Stud(Long)	螺樁(長)	1
73	L1273	Oil Differender	檔油片	1
74	L1274-1	Oil Differender	檔油片組	1
75	J0262	Oil Tube Clamp	油管束子	3
77	LL1277-2	Drain Pipe	排油管	1
78	LL1278-1	Drain Pipe	油管(銅)	1
79	LL1279-1	Drain Pipe Holder	油管支架	1
80	LL1280	Oil Tube(ϕ 2.95× ϕ 5×510L)	油管	1
81	L1281	Oil Pipe(Short)	給油管	1

＊ Ref. No. 01 to 40 ・・・・・See the following page

13

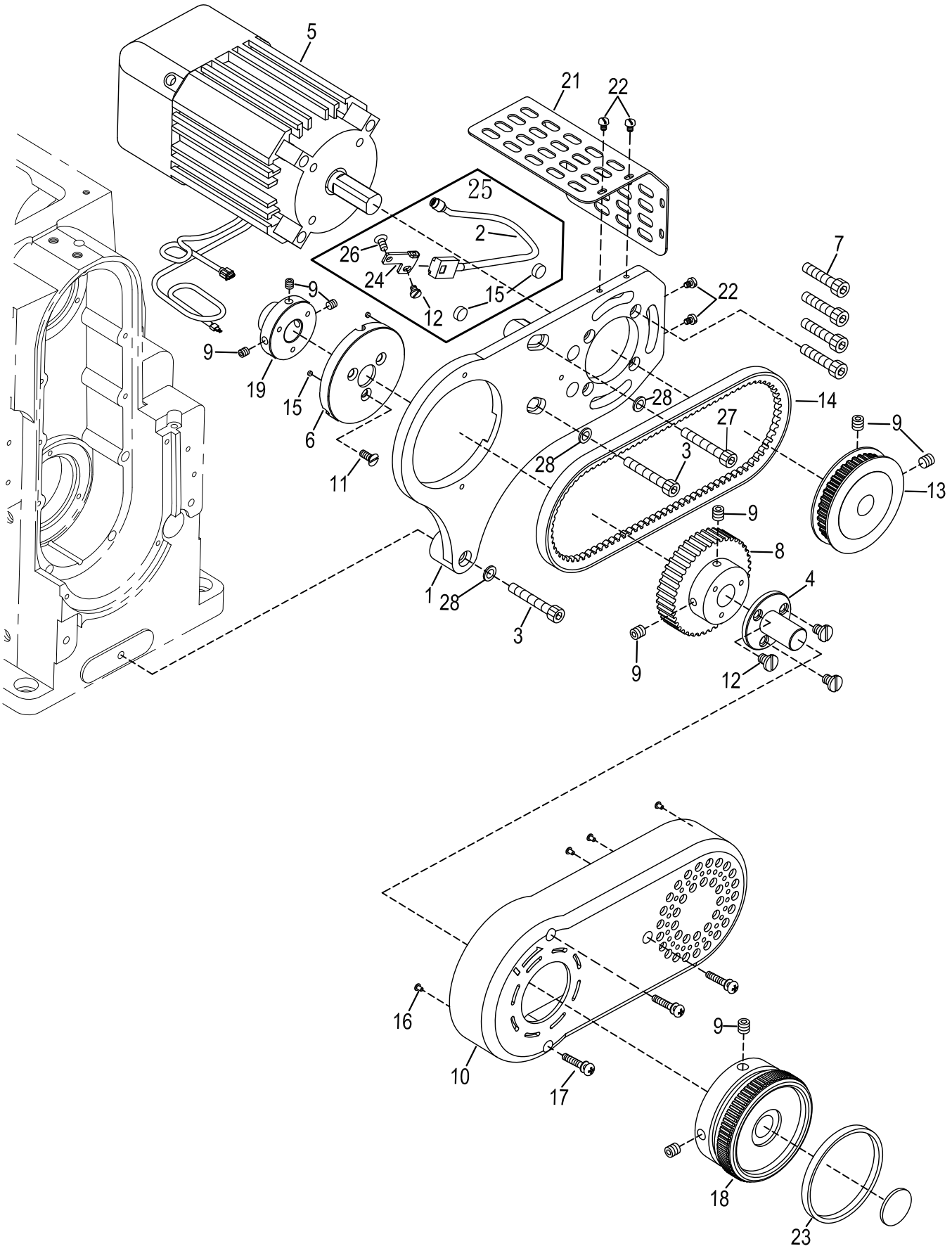

5
21
22
25
2
26
24
15
12
7
22
9
9
19
15
6
11
28
14
27
3
28
9
13
9
8
4
1
28
3
9
12
16
10
17
9
18
23

Ref. No.	Parts No.	Description	產 品 名 稱	Amt . Req .
1	L2301-3	Brackert	馬達支撐架	1
2	24-03	Positioner Cord	雙定位線	1
3	SF243Ni	Screw(M6-1×25)	螺絲	2
4	L2304	Handwheel Adaptor	連接軸	1
5	F1602	Compact Servo Motor	傳動小馬達	1
6	L2306-1	Synchronizor bracket	磁鐵定位座	1
7	SF252NI	Screw(M4-0.7x10)	螺絲	4
8	L2308	Synchronized Gear	同步傳動輪	1
9	SF241	Screw(M6-1.0×10)	螺絲	9
10	L2310	Belt Guard	皮帶安全蓋	1
11	GB18	Screw(M4-0.7×10)	螺絲	3
12	GB37	Screw(M4-0.7×8)	螺絲	4
13	F1607-1	Transmission Gear	齒型帶動輪	1
14	L2314	Synchronized Belt	同步傳動皮帶	1
15	24-02	Built-in Megnatic	厚3 x Ø 5 磁鐵	2
16	F1613	Vibration Absorb Plug	減震橡膠塞	4
17	SV245	Screw(M4-0.7×16)	螺絲	3
18	L2318	Handwheel	手推輪	1
19	L2319-1	Collar	軸套	1
20				
21	F1621	Safety Cover	小馬達安全蓋	1
22	MDA060	Screw(M3-0.5×6)	螺絲	4
23	L2323-1	Code Ring	有色橡膠圈	1
24	L0231	Cord Plate	定位線固定板	1
25	L0231-A	Synchronizer Complete Set	雙定位線組	1
26	L1326	Screw(SM 11/64-40x5.3)	螺絲	1
27	L1327NI	Screw(M6-1.0x23)	螺絲	1
28	15-39	Spring Washer	彈簧華司	3

14

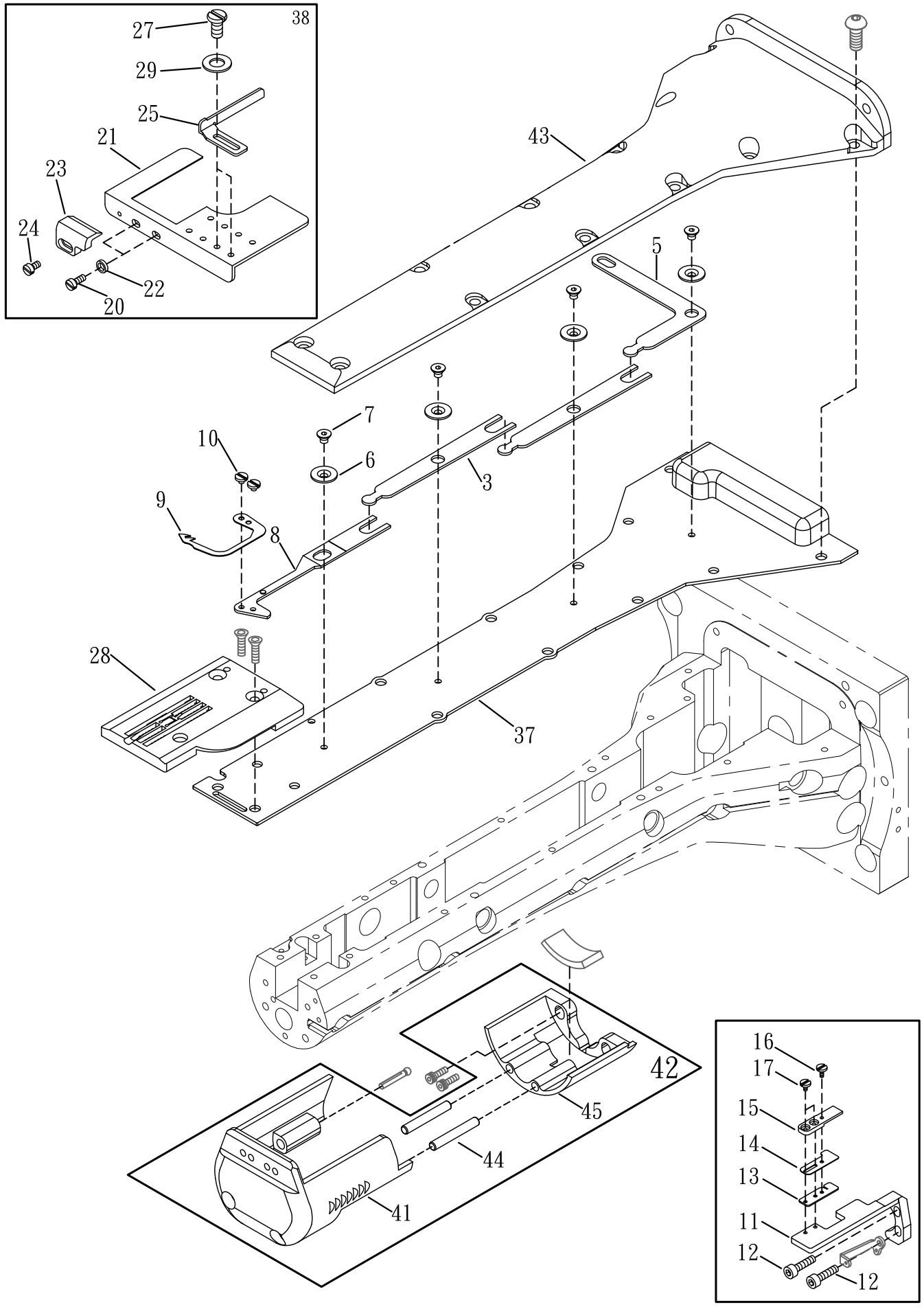
38
27
29
25
21
23
24
22
20
43
5
7
10
6
3
9
8
28
37
42
45
44
41
16
17
15
14
13
11
12
12

Ref. No.	Parts No.	Description	產品名稱	Amt. Req.
1				
2				
3	LL1403	Lower Knife Connecting Rod	下切刀連桿	2
4				
5	L1405	Lower Knife Driving Lever	驅動桿	1
6	LL1406	Knife Guide Lever Ring	導引切刀搖臂偏心輪	4
7	L1407	Screw(M4-0.7X5)	皿型螺絲	4
8	L1408-1	Lower Knife Carrier	下切刀活動刀座	1
9	L1409-4	Lower Knife	下切活動刀	1
10	L1410	Screw(M4-0.5X2)	螺絲	2
11	L1411-4	Lower Knife Carrier	下切固定座	1
12	20-14	Screw(M3-0.5X12)	螺絲	2
13	L1413	Upper Knife Guide	刀墊座	1
14	L1414	Clamp Spring	夾線片	1
15	L1415-3	Upper Knife	下切固定刀	1
16	L1416	Screw	螺絲	1
17	L1417	Screw	螺絲	2
18				
19				
20				
21	LL1421	Folder Stand(For Thread Trimming)	折下擺固定座 (切線用)	1
22	WF03	Washer	墊片	2
23	L0245	Fabric Edge Guide (Left)	左檔邊	1
24	SV208	Screw(M3-0.5X4.4)	螺絲	2
25	L0243-1	Width Aadjuster	可調檔邊	1
26				
27	GW15	Screw (M4 - 0.7 × 5)	螺絲	2
	-	Stitch Plate (With EWT/EST/AWT/AST)	針板(以下,切線用)	
	L1428-2404	Stitch Plate (240)(Optional)	針板(切線)(2針4.0)(選購)	
	L1428-2484	Stitch Plate (248)(Optional)	針板(切線)(2針4.8)(選購)	
	L1428-348	Stitch Plate (348)(Optional)	針板(切線)(3針4.8)(選購)	
	L1428-3565	Stitch Plate (356)(Optional)	針板(切線)(3針5.6)(選購)	
	L1428-3604	Stitch Plate (360)(Optional)	針板(切線)(3針6.0)(選購)	
	L1428-3642	Stitch Plate (364)(Optional)	針板(切線)(3針6.4)(選購)	
28	L1428-356S4	Stitch Plate (356)(Needle: φ1.16)(Optional)	針板(切線)(3針5.6)(細針 φ1.16)(選購)	1
	L1428-452S	Stitch Plate (452)(Needle: φ1.16)(Optional)	針板(切線)(4針5.2)(細針 φ1.16)(選購)	
	L1428-460S	Stitch Plate (460)(Needle: φ1.16)(Optional)	針板(切線)(4針6.0)(細針 φ1.16)(選購)	
	L1428-464S	Stitch Plate (464)(Needle: φ1.16)(Optional)	針板(切線)(4針6.4)(細針 φ1.16)(選購)	
	L1428-356CT	Stitch Plate (356)(COATS)(Optional)	針板(切線)(3針5.6)(高仕線用)(選購)	
	L1428-248TN1	Stitch Plate (248)(Light Fabric)(Optional)	針板(切線)(2針4.8)(薄料)(選購)	
	L1428-356TN1	Stitch Plate (356)(Light Fabric)(Optional)	針板(切線)(3針5.6)(薄料)(選購)	
	L1428-360TN1	Stitch Plate (360)(Light Fabric)(Optional)	針板(切線)(3針6.0)(薄料)(選購)	

＊ Ref. No. 29 to 45 ・・・・・See the following page

14

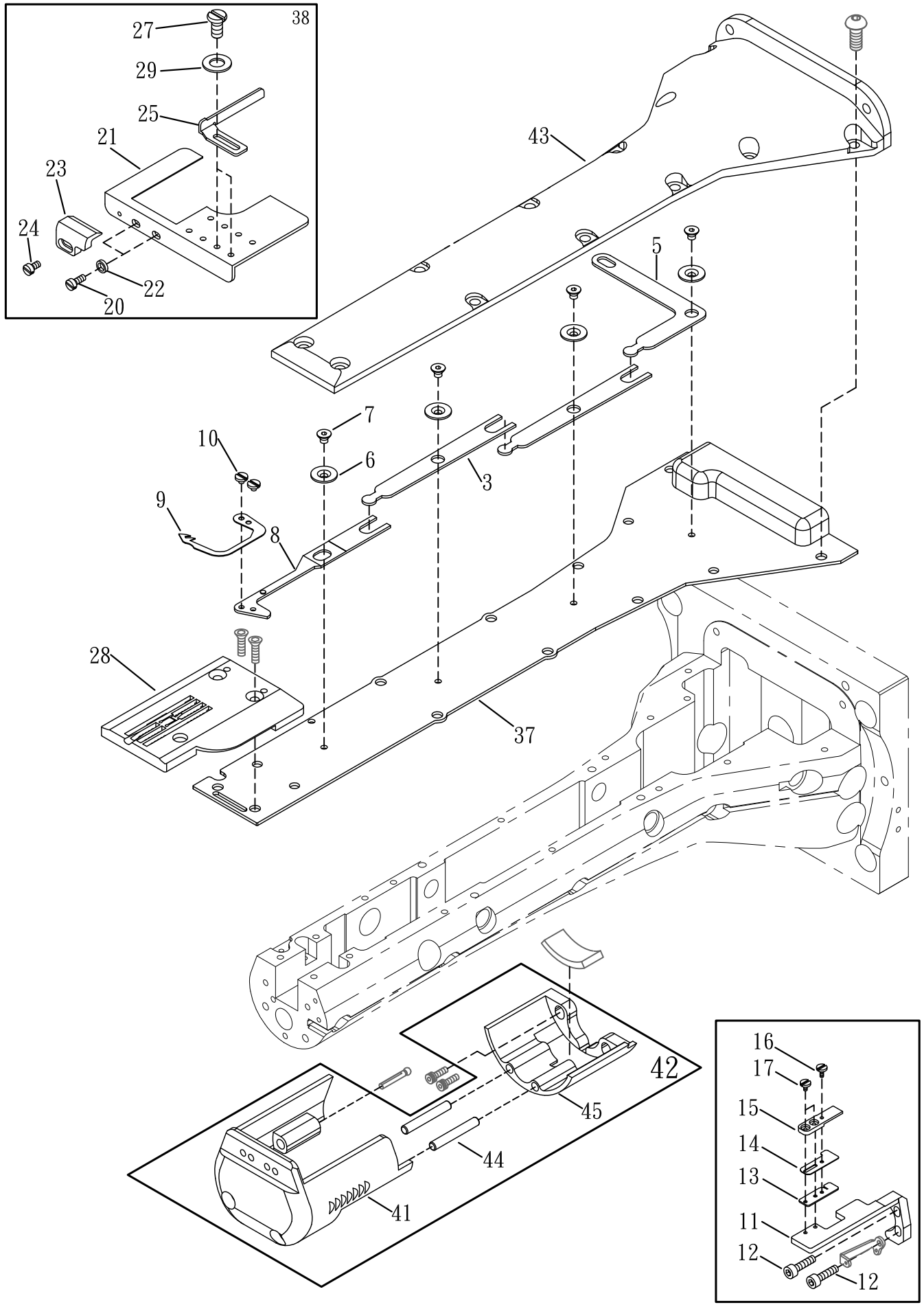
38
27
29
25
21
23
24
22
20
43
5
7
10
6
3
9
8
28
37
42
45
44
41
16
17
15
14
13
11
12
12

Ref. No.	Parts No.	Description	產品名稱	Amt. Req.
29	WF04	Washer	墊片	2
30				
31				
32				
33				
34				
35				
36				
37	LL1437	Cylinder Top Cover (Inner)(For Thread T	縱筒上蓋(內側) (切線用)	1
38	L1421A	Hemming set (for Thread Trimming)	折下擺固定板組(切線用)	1
39				
40				
41	LL1441	Cylinder Front Cover	縱筒前蓋	1
42	LL1441-A	Cylinder Front Cover Set	縱筒前蓋組	
43	LL1443-3	Cylinder Top Cover (For Thread Trimmi	縱筒上蓋 (切線用)	1
44	LL0264	Pin	針狀軸承	2
45	LL0260	Cylinder Front Cover	縱筒前蓋(小)	1

＊ Ref. No. 01 to 28 ・・・・・See the following page

15

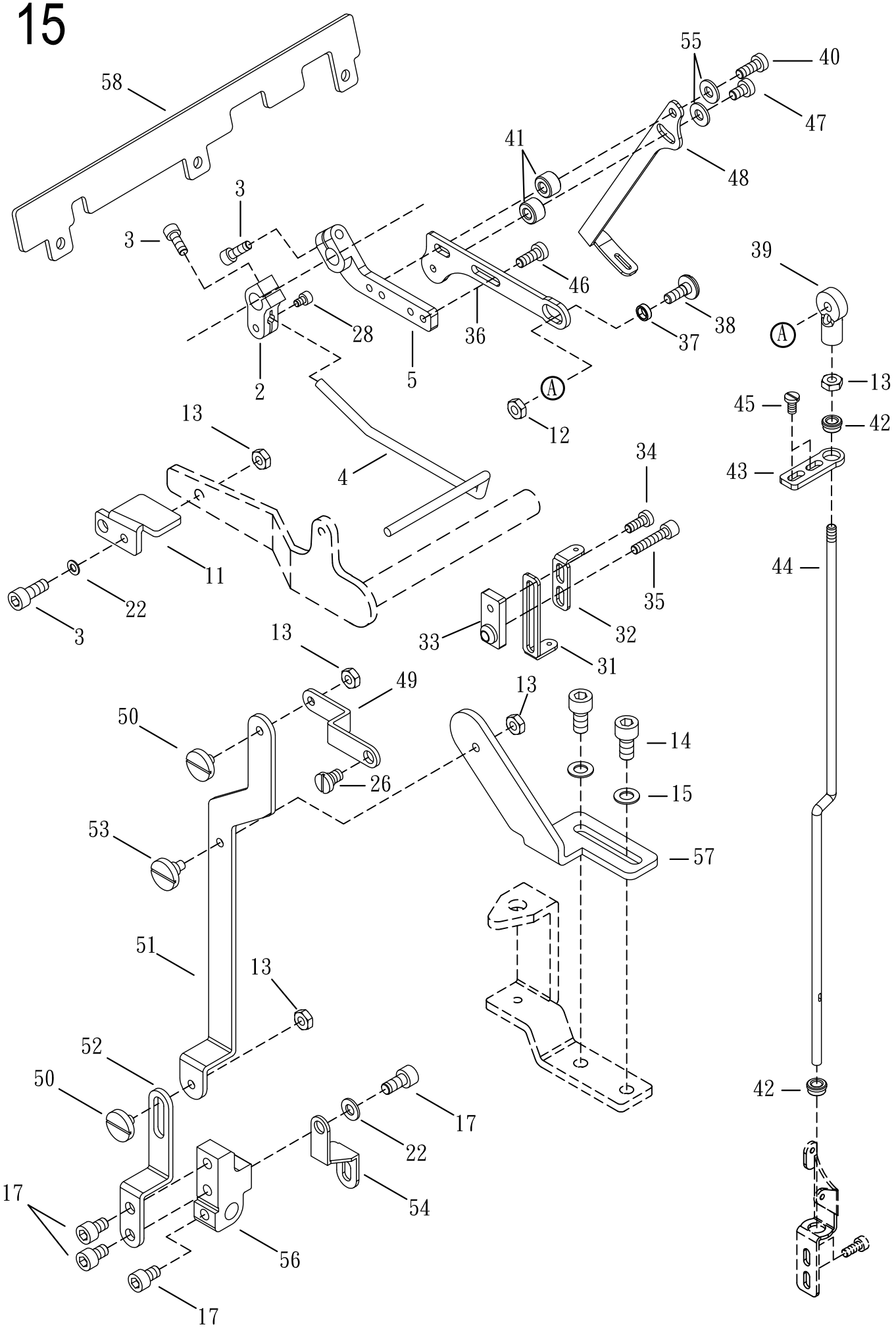

58
55
40
47
41
48
3
3
39
46
38
28
36
37
A
2
5
13
A
45
42
12
13
34
4
43
11
44
22
35
3
33
32
31
13
49
13
50
14
26
15
53
57
51
13
52
50
42
17
22
17
54
56
17

AUTO TRIMMER THRAD PULL-OFF MECHANISH 自動切線鬆線機構 15

Ref. No.	Parts No.	Description	產品名稱	Amt. Req.
1				
2	L1502-1	Tension Release Lever	鬆線曲柄	1
3	SF226Ni	Screw(M4-0.7X12)	螺絲	3
4	L1504-1	Thread Wiper Lever	撥線桿	1
5	L1505	Tension Release Lever	鬆線曲柄	1
11	L1511	Lifter Lever Stop	提升限位片	1
12	NF12	Nut (SM 11/64 - 40)	螺帽	1
13	NF27	Nut (M4-0.7)	螺帽	5
14	SF244Ni	Screw (M6-1.0X16)	螺絲	2
15	WF06	Washer	墊片	2
17	SV252Ni	Screw (M5-0.8X10)	螺絲	4
22	VK48	Washer	墊片	4
26	L0328	Screw(M5-0.8X5.4)	螺絲	1
28	SF224Ni	Screw(M4-0.7X8)	螺絲	1
31	L1531	Looper Thread Eyelet	下飾線過線板	1
32	L1532	Looper Thread Eyelet (Right)	下飾線過線板(右)	1
33	L1533	Looper Thread Eyelet (Left)	下飾線過線板(左)	1
34	SV229	Screw(M4-0.7×7)	螺絲	2
35	SF221	Screw(M4-0.7×20)	螺絲	1
36	L1536	Link (Long)	連接柄(長)	1
37	L1537	Bushing	襯套	1
38	L1538	Screw (SM 11/64 - 40×9.82)	螺絲	1
39	L1539-1	Link	連接柄	1
40	MFP160Ni	Screw(M4-0.7×16)	螺絲	1
41	VK41	Spacer	墊塊	2
42	L1542-1	Cushion Rubber	防震橡膠	2
43	L1543	Thread Pull-off Eyelet	過線鬆線架	1
44	L1544-2	Thread Pull-off Bar	過線鬆線桿	1
45	SF114	Screw	螺絲	2
46	SV221	Screw(M4-0.7×8)	螺絲	1
47	SF226Ni	Screw(M4-0.7×12)	螺絲	1
48	L1548	Looper Thread Take-up	下飾線揚線桿	1
49	L1549	Link(short)	連接柄(短)	1
50	L1550	Screw (M4 × 0.7)	螺絲	2
51	L1551	Link(Long)	連接柄(長)	1
52	L1552-1	Tension Release Connecting Plate	安全開關固定座	1
53	L1553	Screw(M4-0.7×7.6)	螺絲	1
54	L1554	Magnetic Bracket	磁鐵座	1
55	WF04	Washer	墊片	2
56	L1556	Tension Release Block	壓簧固定座	1
57	L1557-1	Connecting Plate	連結器	1
58	L0316-1	Tension Disc Separator	鬆線滑板	1

16-1

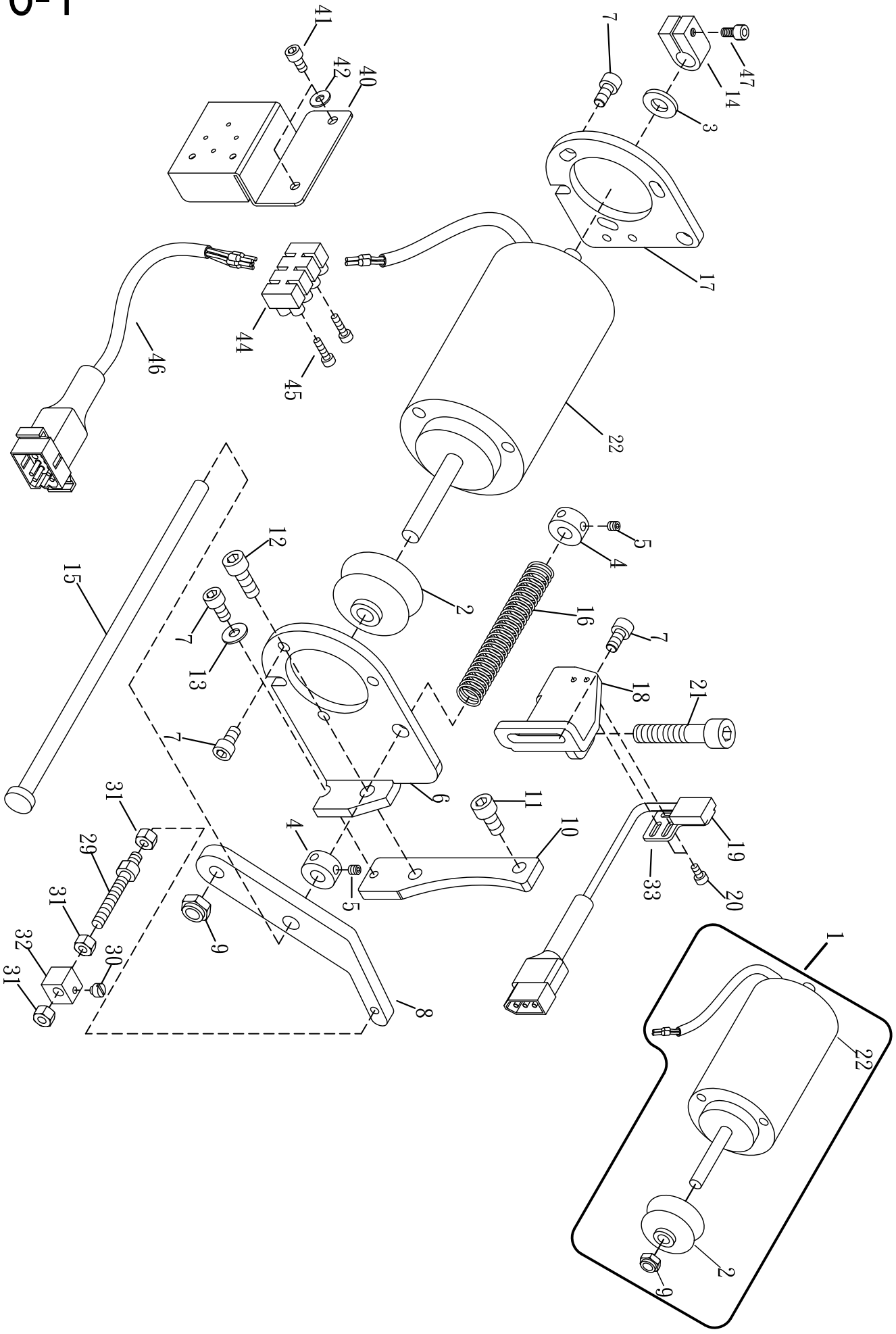

41
42
40
7
47
14
3
17
44
45
46
22
5
4
12
15
2
16
7
13
7
18
21
7
6
11
10
19
4
5
33
20
31
29
31
32
30
31
9
8
1
22
2
9

Ref. No.	Parts No.	Description	產品名稱	Amt. Req.
1	L1601	Under Trimmer Solenoid Complete Set	下切刀電磁閥組	1
2	L1602	Solenoid Body	電磁閥伸縮護套	1
3	21-06	Rubber Cushion	橡膠	1
4	VH32	Collor(8mm X 16mm X 8mm)	定位環	2
5	SF228	Screw(M4-0.7×4)	螺絲	4
6	L1606	Trimming Solenoid Support	下切刀驅動固定座	1
7	SV252Ni	Screw(M5-0.8×10)	螺絲	8
8	L1608-1	Shaft Support	軸心固定座	1
9	18-05	Nut	螺帽	1
10	L1610	Fixed Plate	驅動固定塊	1
11	GK03Ni	Screw(M6-1.0X14)	螺絲	1
12	GA29Ni	Screw(M6-1.0X20)	螺絲	1
13	VK48	Washer	墊片	1
14	21-07	Collar	止推座	1
15	L1615-1	Solenoid Return Shaft	螺桿軸心	1
16	L1616-1	Spring	彈簧	1
17	L1617	Trimming Solenoid Support	下切刀驅動固定座	1
18	L1618-1	Safety Swittch Support	安全開關固定座	1
19	L1619	Safety Switch Bracket	安全開關座	1
20	SF211Ni	Screw(M3-0.5X6)	螺絲	2
21	L1621Ni	Screw (M8-1.25X40)	螺絲	1
22	L1605	Solenoid	電磁閥	1
29	19-36	Screw(M5-0.8X40)	螺絲	1
30	L1630	Screw(M4-0.7X5)	螺樁	1
31	NV12	Nut	螺帽	3
32	LL1632	Adjusting Rod Block	調節桿座	1
33	L1633	Safety Switch Bracket	安全開關座	1
40	F1616	Solenoid Base	電子閥固定座	1
41	SF222Ni	Screw(M4-0.7×6)	螺絲	2
42	WF04		墊片	2
43				
44	19-40	Terminator Base	端子座	1
45	MDA100	Screw(M3-0.5×10)	螺絲	2
46	19-43	Adopting Cord	電切用中繼線	1
47	SV253Ni	Screw(M5-0.8X16)	螺絲	1

17

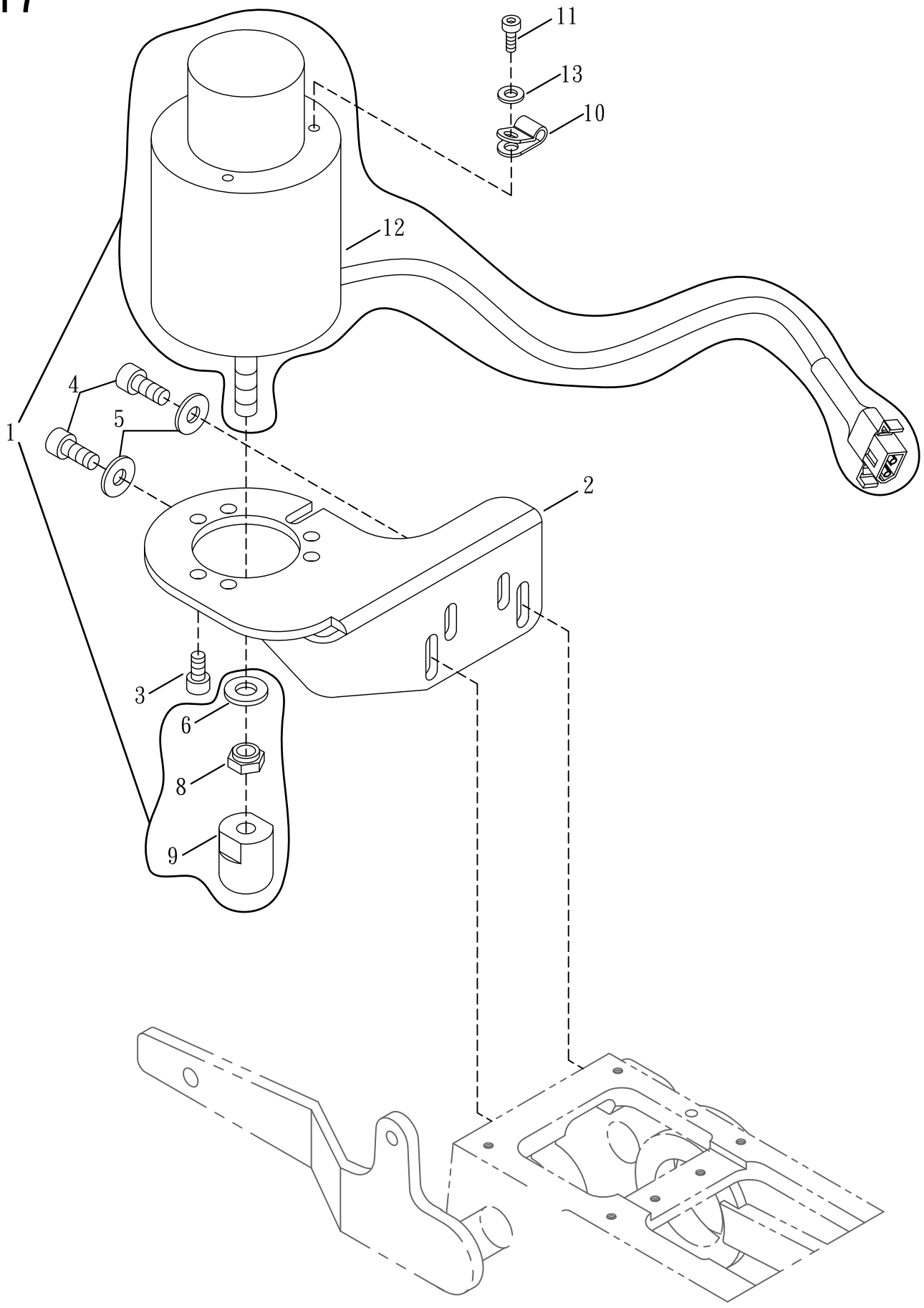

PRESSER FOOT LIFTER (ELECTRIC TYPE)(OPTIONAL) 電磁式抬押腳驅動機構(選購) 17

Ref. No.	Parts No.	Description	產 品 名 稱	Amt . Req .
1	L1701-1	Presser Foot Lifter Solenoid Complete S	抬押腳電磁閥組	1
2	L1702	Solenoid Support	電磁閥吊座	1
3	SV252Ni	Screw(M5-0.8×10)	螺絲	3
4	GK03Ni	Screw (M6 - 1.0 × 14)	螺絲	2
5	WF06	Washer	墊片	2
6	L1706	Rubber Cushion	橡膠墊	1
7	L1707	Washer	墊片	1
8	L1708	Nut	螺帽	2
9	L1709	Plastic Pushing Block	塑膠推塊	1
10	FL29	Plastic Clamp	塑膠固定夾	1
11	SV259Ni	Screw(M5-0.8×6)	螺絲	1
12	L1703	Solenoid	電磁閥	1
13	WF04-1	Washer	墊片	1

18-1

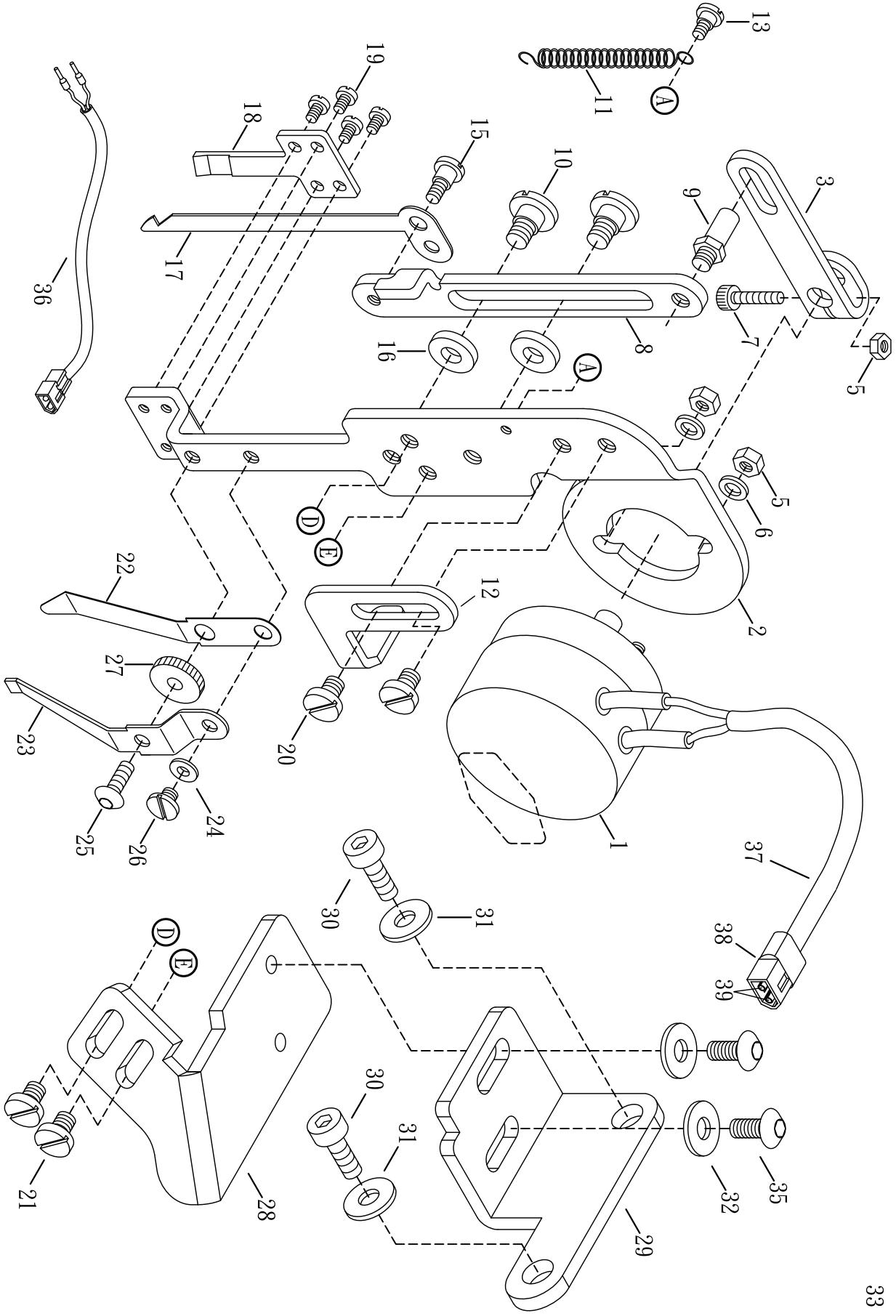
13
11
A
19
18
15
10
9
3
17
36
16
8
7
5
A
5
6
D
E
22
12
2
27
20
23
25
24
26
1
37
30
31
38
39
D
E
30
31
21
28
32
35
29
33

Ref. No.	Parts No.	Description	產品名稱	Amt. Req.
1	37-01	Solenoid	電磁閥	1
2	37-02	Solenoid Bracket	電磁閥機體座	1
3	37-03-1	Solenoid Driving Arm	電磁閥驅動臂	1
4	37-04	Emblem	名牌	1
5	37-05	Nut	螺帽	3
6	18-24	Washer	華司	3
7	37-07	Screw	螺絲	1
8	37-08-1	Top Trimmer Guide Plate	上切刀導槽座	1
9	37-09	Screw	導槽連接螺絲	1
10	37-10	Screw	螺絲	2
11	37-11	Spring	拉簧	1
12	37-12-1	Adjusting Screw	調節器	1
13	37-13	Screw	螺絲	1
14				
15	18-15-1	Screw	螺絲	2
16	37-16	Washer	墊片	2
17	18-17	Movable Trimming Knife	上切活動刀	1
18	18-18	Fixed Trimming Knife	上切固定刀	1
19	18-19	Screw	螺絲	4
20	18-20	Screw	螺絲	2
21	18-21	Screw	螺絲	2
22	18-22	Clamp Spring	夾線片	1
23	18-23-1	Knife Press Adjusting Spring	夾線押力片	1
24	18-24	Washer	墊片	1
25	18-25	Adjusting Screw	調節螺絲	1
26	18-26	Screw	螺絲	1
27	18-27	Nut	調節螺帽	1
28	L1828	Knife Guide Bracket	方向作動調整座	1
29	L1829	Upper Trimming Knife Base	上切刀固定座	1
30	GL16Ni	Screw(M6-1.0×12)	連座螺絲	2
31	WF06	Washer	華司	2
32	FA24	Washer	華司	2
33	L1833	Top Thread Trimmer, Complete Set	上切刀整組	1
34				
35	18-31	Screw	螺絲	2
36	LL1836	Connector(400mm)	端子連接線	1
37	20-32	PVC Cover	PVC套管	1
38	20-33	Connector Cover	連接器套頭	1
39	20-34	Teminal	端子(母)	2

19-1

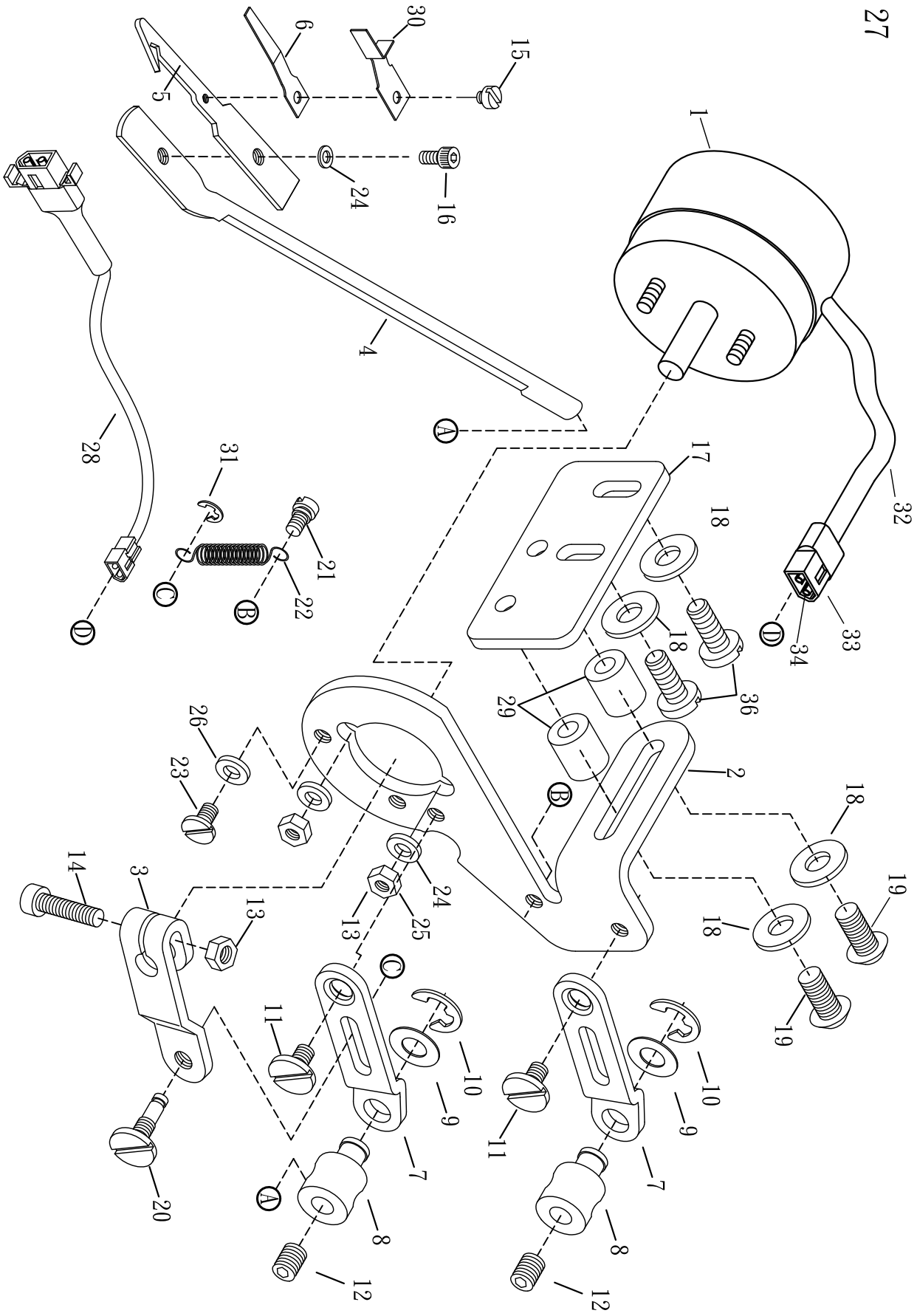
27
1
2
3
4
5
6
7
8
9
10
11
12
13
14
15
16
17
18
19
20
21
22
23
24
25
26
28
29
30
31
32
33
34
36
A
B
C
D

Ref. No.	Parts No.	Description	產品名稱	Amt. Req.
1	L1901	Wiper Solenoid	撥線電磁閥	1
2	N2602	Solenoid Support	撥線機體座	1
3	20-03	Wiper Bracket	電磁驅動臂	1
4	N2604	Wiper Bar	撥線搖臂	1
5	N2605	Wiper Hook	撥線勾	1
6	N2606	Clamp Spring	夾線彈簧片	1
7	20-07	Wiper Adjusting Arm	方向作動調整臂	2
8	20-08	Solenoid Lever Pin	轉動軸	2
9	20-09	Washer	墊片	2
10	16-28	Retaining Ring	扣環	2
11	20-11	Screw	螺絲	2
12	SF228	Screw (M4/0.7×4)	螺絲	2
13	37-05	Nut (M3 × 0.5)	螺帽	1
14	20-14	Screw (M3 × 0.5 -12)	螺絲	1
15	20-15	Screw (M2 × 0.4-2)	螺絲	1
16	17-22	Screw (M3 × 0.5-4)	螺絲	1
17	L1917	Solenoid Support Link	連接支撐架	1
18	WF04	Washer (M4)	墊片	4
19	SV231	Screw (M4 × 0.7-18)	螺絲	2
20	20-20	Pin Screw	驅動臂插銷	1
21	37-13	Screw(M3×0.5-2.4)	螺絲	1
22	N2622	Spring	拉簧	1
23	SV112	Screw (SM9/64×40-4.5)	螺絲	1
24	18-24	Washer	墊片	3
25	20-25	Nut (M3)	螺帽	2
26	20-26	Stop Washer	消力擋	1
27	L1927	Wiper Set	撥線器組	1
28	L1836	Extension Cord	連接延長線	1
29	L1929	Bushing	襯套	1
30	N2629	Needle Guard	頂針片	
31	H1341	Retaining Ring	扣環	1
32	20-32	PVC Cover	PVC套管	1
33	20-33	Connector Cover	連接器套頭	1
34	20-34	Teminal	端子(母)	2
35				
36	SV232	Screw (M4 × 0.7 - 10)	螺絲	2

20-1

1
2
3
4
5
6
7
8
10
11
12
13
14
15
16
17
18
19
20
21
22
23
24
25
27
28
29
30
31
32
33
34
35
A
A

Ref. No.	Parts No.	Description	產品名稱	Amt. Req.
1	L2001	Trimming Cylinder Complete Set	氣缸組	1
2	L2002	Adjusting Air Value	調節閥	2
3	L2003	Cylinder Bracket	氣缸連座	1
4	L2004	Nut	螺帽	1
5	L1606	Trimming Solenoid Support	下切刀驅動固定座	1
6	L1608-1	Shaft Support	軸心固定座	1
7	SV252Ni	Screw (M5-0.8×10)	螺絲	4
8	L2008	Nut	螺帽	1
9				
10	SF226Ni	Screw (M4-0.7×8)	螺絲	2
11	19-36	Screw	螺絲	1
12	NV12	Nut	螺帽	2
13	L1630	Screw(M5-0.8X26)	螺椿	1
14	LL1632	Adjusting Rod Block	調節桿座	1
15	SF211Ni	Screw	螺絲	2
16	WF03	Washer	墊片	2
17	L1615	Solenoid Return Shaft	螺桿軸心	1
18	VH32	Collor(8mm X 16mm X 8mm)	定位環	2
19	SF228	Screw(M4-0.7X4)	螺絲	4
20	L1616	Spring	彈簧	1
21	GK03Ni	Screw(M6-1.0×14)	螺絲	1
22	L1610	Fixed Plate	驅動固定塊	1
23	21-06	Anti-shock Rubber	避震膠墊	1
24	21-07	Collar	止推座	1
25	SF231Ni	Screw(M5-0.8×14)	螺絲	1
26				
27	L1619	Safety Switch Base	安全開關座	1
28	GJ08	Washer	墊片	1
29	GA29	Screw(M6-1.0×18)	螺絲	1
30	L2030	Cylinder Bracket	氣缸連座	1
31	P0166	Screw	螺絲	2
32	L1618	Bracket	固定座	1
33	L1621Ni	Screw (M8-1.25X40)	螺絲	1
34	GE47	Washer	墊片	2
35	L2005	Air Cylinder	氣缸	1

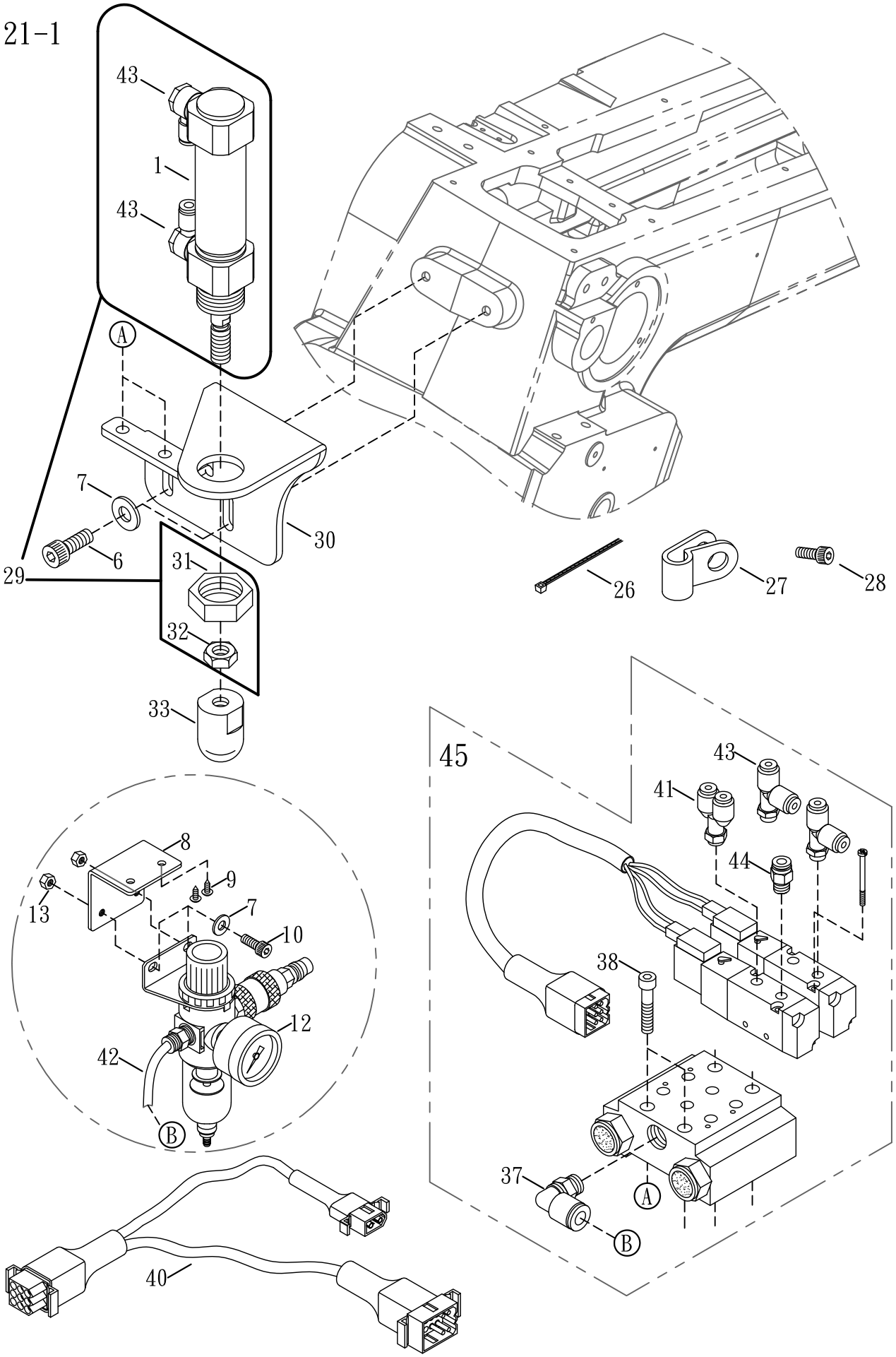
21-1
43
1
43
A
7
6
29
30
31
32
33
26
27
28
45
43
41
44
38
37
A
B
8
9
13
7
10
12
42
B
40

PRESSER FOOT LIFTER (PNEUMATIC TYPE)(OPTIONAL氣壓式抬壓腳組與氣壓閥壓力表(選購) 21-1

Ref. No.	Parts No.	Description	產 品 名 稱	Amt . Req .
1	J3225	Air Cylinder	氣缸	1
6	GK03	Screw (M6 - 1.0 × 14)	螺絲	2
7	WF06	Washer	墊片	4
8	23-08	Regulator Support	壓力表支架	1
9	15-24	Wooden Screw	木螺絲	2
10	SV266	Screw(M6-1×10)	螺絲	2
11				
12	23-12	Pressure Meter	壓力表	1
13	NF31	Nut	螺帽	2
15				
16				
19				
20				
26	H1447	Fixed Belt	鎖式絮帶	3
27	FL29	Plastic Clamp	塑膠固定夾	2
28	SF224	Screw(M4-0.7X8)	螺絲	2
29	J3224	Air Cylinder Complete Set	氣缸組	1
30	L2130	Air Cylinder Bracket	氣缸托架	1
31	M2603	Nut	螺帽	1
32	M2604	Nut	螺帽	1
33	23-05-1	Plastic Pushing Block	塑膠推塊	1
34	L2134	Screw	螺絲	3
35				
36				
37	23-31	Elbow Connector	彎接管	1
38	MFP300	Screw (M4 - 0.7 × 30)	螺絲	4
39				
40	N2020	Pneumatic Adaptor Cord	風切中繼線,雙線	1
41	23-25	Air Tube	Y型2通接頭	1
42	1M036	Air Tube (ϕ4×ϕ6×700)	風管	1
43	23-26	Air Tube	T型2通接頭	2
44	23-27	Air Tube	直接管	1
45	23-15CLL2	Air Solenoid Base	電磁閥整組	1

22-1

整組編號L2210
Complete Set

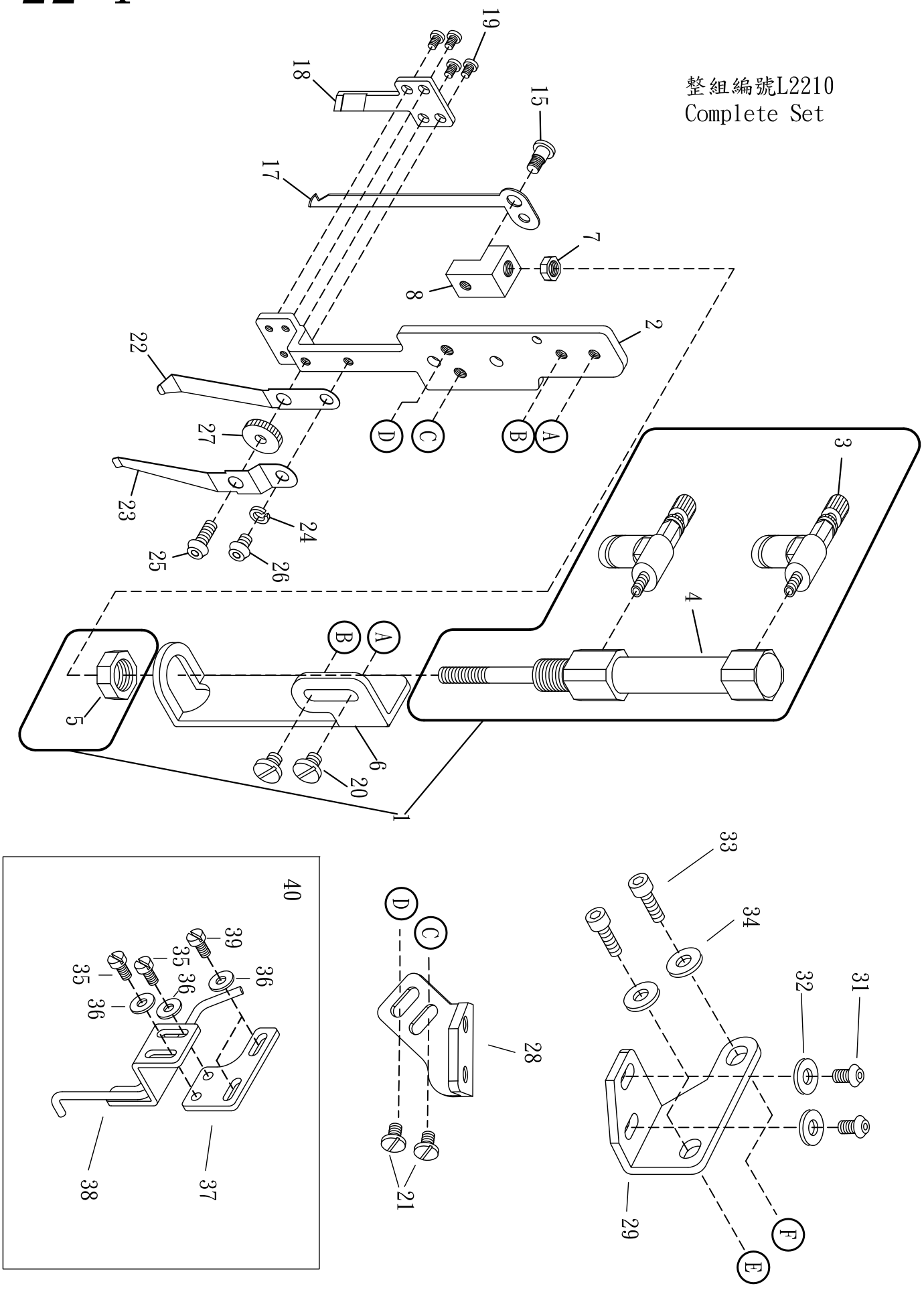

Ref. NO.	Parts NO.	Description	零 件 名 稱	Amt. Req.
1	18-1	Top Trimmer Air Cylinder Complete S	上切刀氣缸組	1
2	18-2	Fixed Trimmer Knife Holder	氣壓式切刀導槽	1
3	18-3	Pneumatic Regulator	調節閥	2
4	18-4	Top Trimmer Air Cylinder	上切刀氣缸	1
5	18-5	Nut	螺帽	1
6	18-6	Air Cylinder Bracket	氣缸托座	1
7	18-7	Nut	螺帽	1
8	18-8	Movable Trimming Knife Base	活動刀固定座	1
9				1
10	L2210	Complete Set Pneumatic Top Trimmer	上切刀氣壓組	1
15	18-15-1	Screw (M3-0.5×3.4)	螺絲	1
16				
17	18-17	Movable Trimming Knife	上切活動刀	1
18	18-18	Fixed Trimming Knife	上切固定刀	1
19	18-19	Screw (M2-0.4×3.8)	螺絲	4
20	18-20	Screw (SM9/64-40×5)	螺絲	2
21	18-21	Screw (M4-0.7×6)	螺絲	2
22	18-22	Clamp Spring	夾線片	1
23	18-23-1	Knife Press Adjusting Spring	夾線押力片	1
24	18-24	Washer	華司	1
25	18-25	Adjusting Screw (M3-0.5×8)	調節螺絲	1
26	18-26	Screw (M3-0.5×4)	螺絲	1
27	18-27	Adjusting Nut	調節螺帽	1
28	L2228	Trimming Movement Base	方向作動整座	1
29	L2229	Trimming Fixed Bracket	上切刀固定作	1
30				
31	18-31	Screw (M4-0.7×8)	螺絲	4
32	FA24	Washer	華司	4
33	GK03NI	Screw (M6-1.0×14)	螺絲	2
34	WF06	Washer	華司	2
35	SF222NI	Screw(M4-0.7X6)	螺絲	2
36	WF04	Washer	墊片	4
37	L2224	Air Wiper Bracket	吹風撥線管調節定位座	1
38	L2225	Air Wiper Tube	吹風撥線管	1
39	SF224NI	Screw(M4-0.7X8)	螺絲	2
40	L2240	Air Wiperc Set	吹風撥線管整組	1

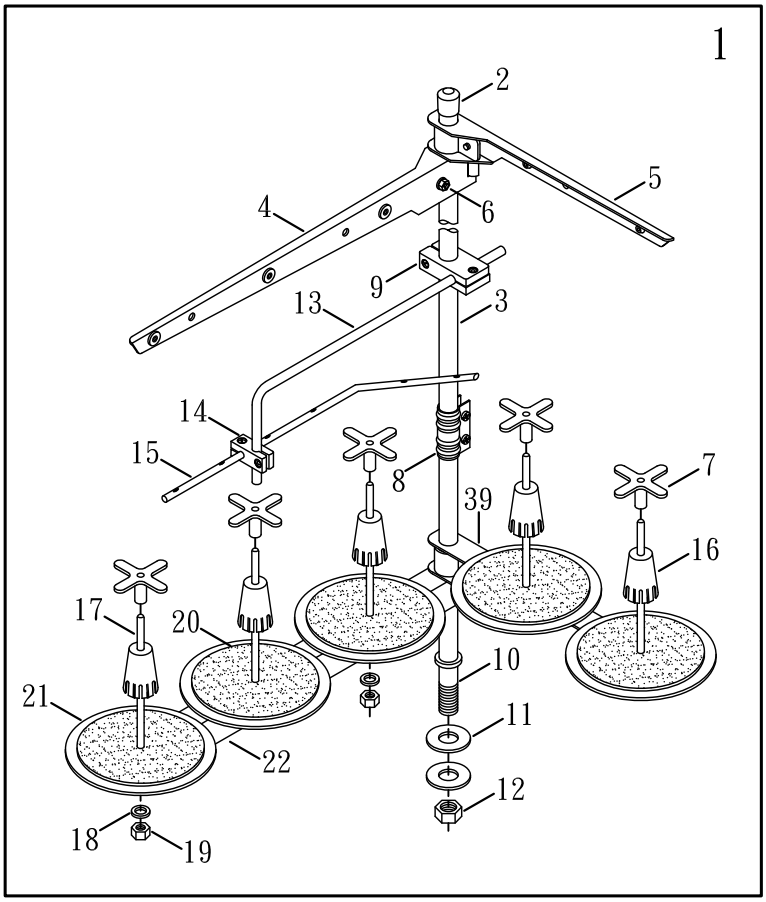
1
2
4
5
6
9
13
3
14
15
8
39
7
16
17
20
10
21
11
22
12
18
19

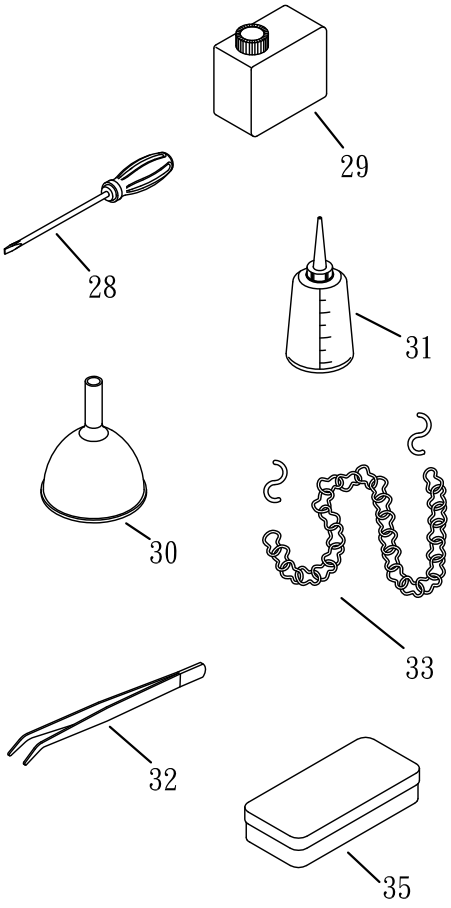
29
28
31
30
33
32
35

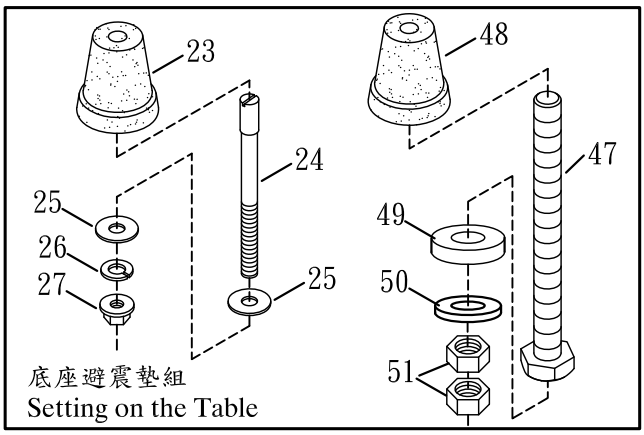
23
48
24
47
25
49
26
27
25
50
51
底座避震墊組
Setting on the Table

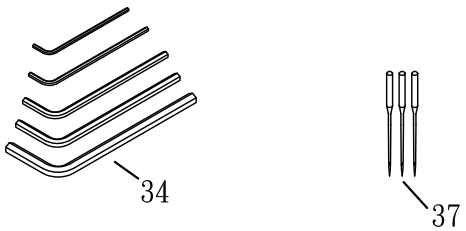
34
37

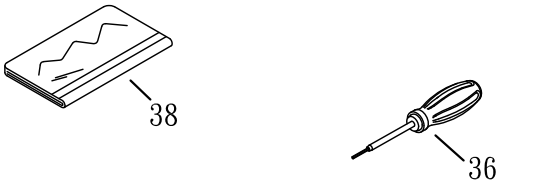
38
36

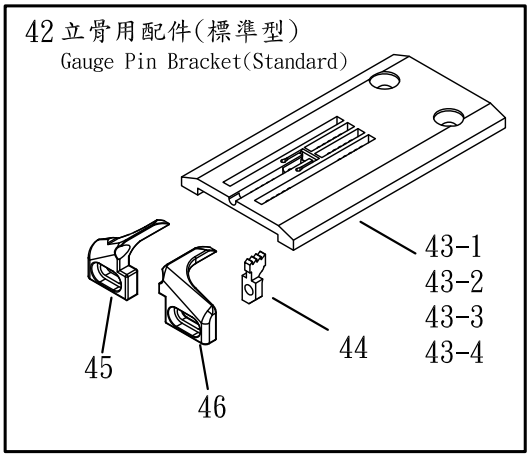
42 立骨用配件(標準型)
Gauge Pin Bracket(Standard)
43-1
43-2
43-3
43-4
44
45
46

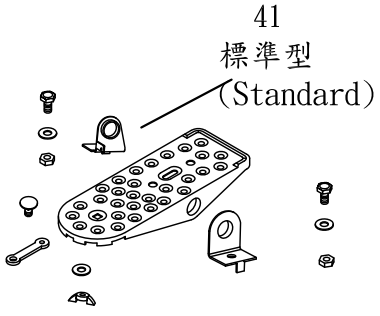
41
標準型
(Standard)

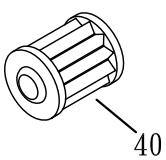
40

Ref. No.	Parts No.	Description	產品名稱	Amt. Req.
1	15-01	Thread Stand	線架組	1
2	15-02	Cap	鐵管塑膠套	1
3	15-03	Thread Stand Rod(upper)	線架鐵管上	1
4	15-04	Thread Guide Bracket(3)	3孔過線鐵板	1
5	15-05	Thread Guide Bracket(2)	2孔過線鐵板	1
6	15-06	Screw	鐵板固定螺絲	4
7	FM02	Spool Retaining Fig	橡膠固定器	5
8	15-08	Joint	鐵管接頭	1
9	15-09	Holder	塑膠接頭(大)	1
10	15-10	Thread Stand Rod(Lower)	線架鐵管(下)	1
11	15-11	Washer	鐵管華司	2
12	15-12	Nut	鐵管螺母	1
13	15-13	Thread Guide Bar	90度過線管	1
14	15-14	Holder	塑膠接頭小	1
15	15-15	Thread Guide Bar	6孔過線	1
16	15-16	Spool Retaining Fig	線筒固定器	5
17	15-17	Spool Pin	線筒柱子	5
18	15-18	Spring Washer	柱子華司	5
19	15-19	Spool Nut	柱子螺母	5
20	15-20	Spool Mat	海棉	5
21	15-21	Spool Tray	線筒盤子	5
22	15-25	Spool Pin Bracket (3)	3孔線軸架	1
23	N1631-2	Oil Reservoir Rubber Cushion	底座避震膠墊	2
24	15-37	Setting Screw (Long)	長底座固定螺絲	2
25	15-38	Washer	墊片	4
26	15-39	Spring Washer	彈簧華司	2
27	NV13	Nut	螺帽	2
28	FM09	Screwdriver	螺絲起子	1
29	FM11	SF Oil	油壺	1
30	FM12	Funnel	漏斗	1
31	FM13	Deerix Oil	油罐	1
32	FM14	Thread Tweezers	夾子	1
33	FM17	Chain (Standard)	鐵鍊(標準型)	1
34	FM20A	Hexagonal Wrench	六角板手	1
35	FM21	Box	零件盒	1
36	FM18	Screwdriver	六角起子	1
37	TVx7	Needle	車針	3
38	FM10	Head Cover	防塵套	1
39	15-26	Spool Pin Bracket (2)	2孔線軸架	1
40	FL20	Oil Filter	濾油器	1

＊ Ref. No. 41 to 51 ・・・・・See the following page

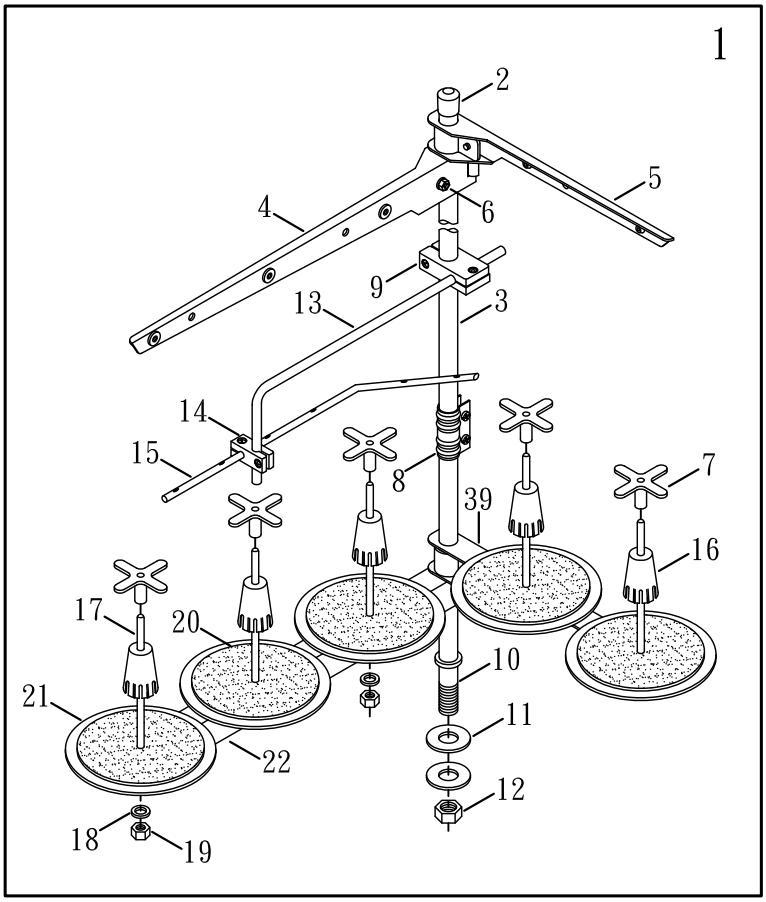
1
2
4
5
6
9
13
3
14
15
8
39
7
16
17
20
10
21
11
22
12
18
19

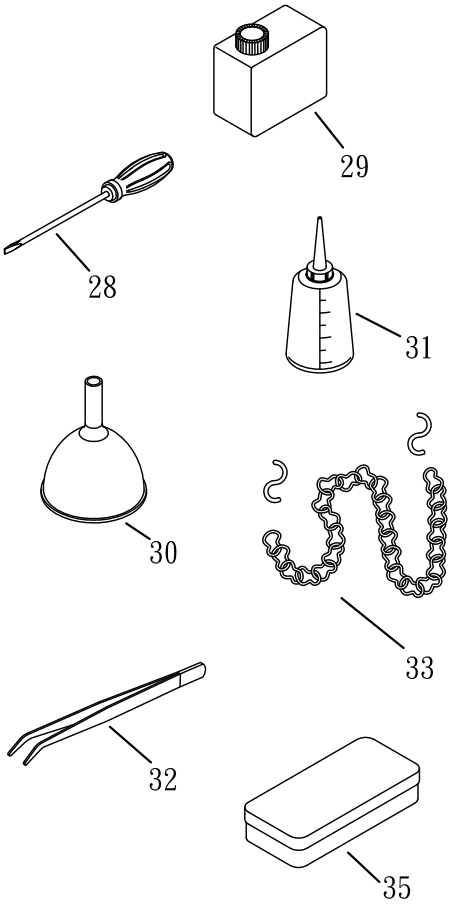
29
28
31
30
33
32
35

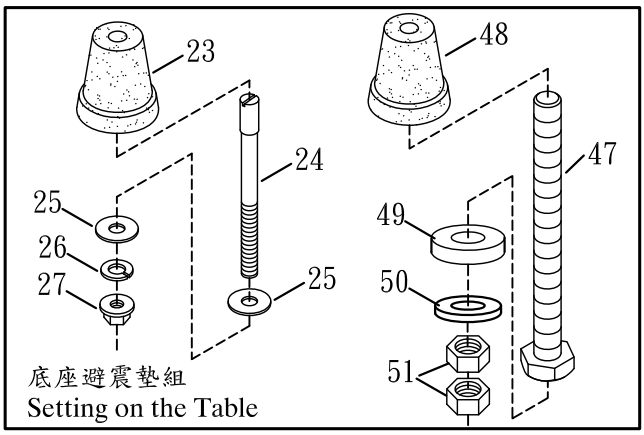
23
48
24
47
25
49
26
27
25
50
51
底座避震墊組
Setting on the Table

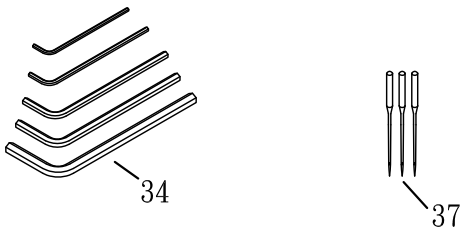
34
37

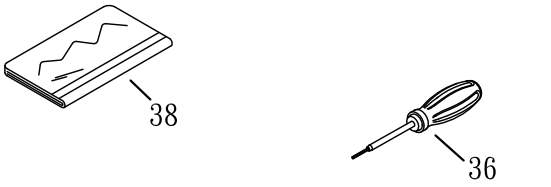
38
36

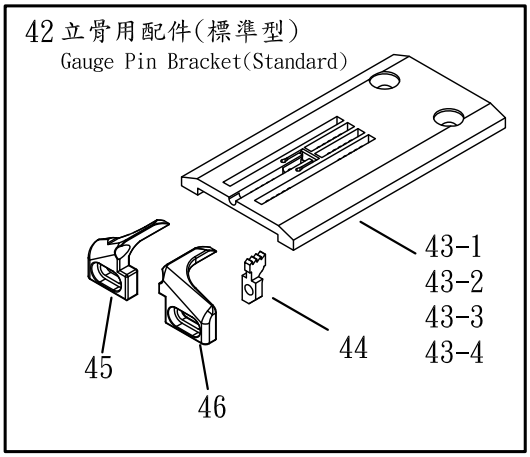
42 立骨用配件(標準型)
Gauge Pin Bracket(Standard)
43-1
43-2
43-3
43-4
44
45
46

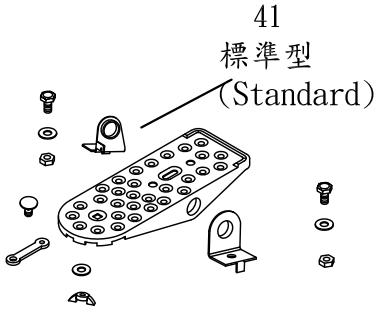
41
標準型
(Standard)

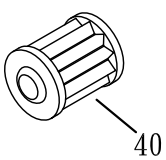
40

Ref. No.	Parts No.	Description	產品名稱	Amt. Req.
41	FM22	Presser Foot Pedal (Standard)	踏板(標準型)	1
42	L2342	Gauge Pin Bracket (Standard)	立骨用配件(標準型)	
43-*	-	(Without EWT/AWT/AST)	立骨針板(以下，普通用)	
43-1	L0634-356H2	Bulging Stitch Plate(356)(Optional)	立骨針板(3針5.6)(普通)(選購)	
43-2	L0634-364H	Bulging Stitch Plate(364)(Optional)	立骨針板(3針6.4)(普通)(選購)	1
43-3	L0634-460H1	Bulging Stitch Plate(460)(Optional)	立骨針板(4針6.0)(普通)(選購)	
43-4	L0634-464H1	Bulging Stitch Plate(464)(Optional)	立骨針板(4針6.4)(普通)(選購)	
44	L1157-356H	Differential Feed Dog(Middle)	差動齒	1
45	L0209H	Fabric Guide(Left) (Bulging)	導布器(左)(立骨)	1
46	L0211H	Fabric Guide(Right) (Bulging)	導布器(右)(立骨)	1
47	MJN1100	Setting Screw (Long)(M8-1.25X110)	長底座固定螺絲	2
48	LL2358-1	Oil Reservoir Rubber Cushion	底座避震膠墊	2
49	J3009	Rubber Cusion	橡膠	2
50	J3642	Washer	墊片	2
51	NV14	Nut	螺帽	4

＊ Ref. No. 01 to 40 ・・・・・See the following page

23-1

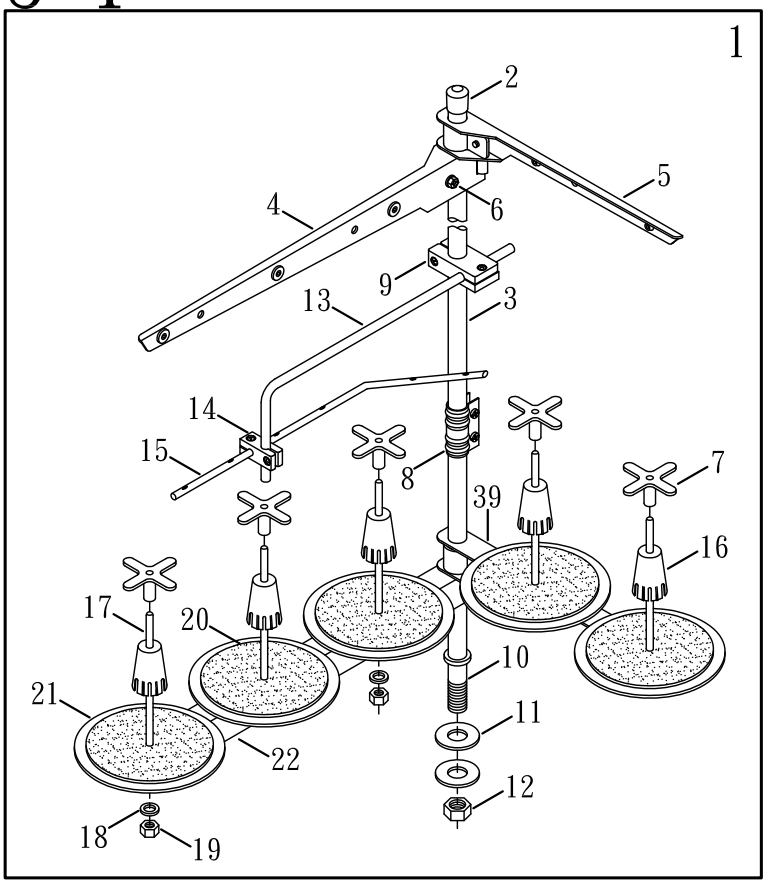
1
2
4
5
6
9
13
3
14
15
8
7
39
16
17
20
10
21
11
22
12
18
19

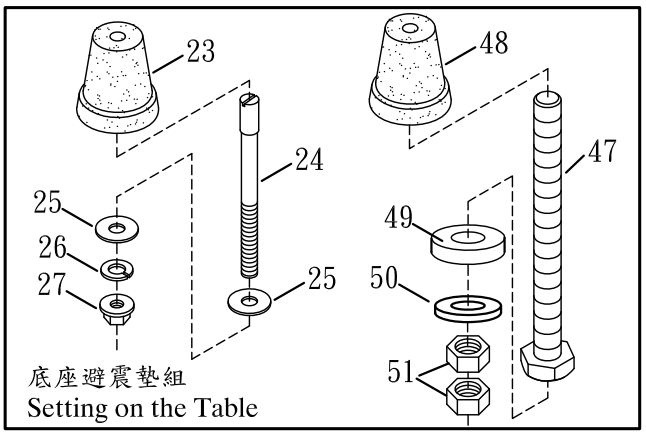
23
48
24
47
25
26
27
49
50
25
51
底座避震墊組
Setting on the Table

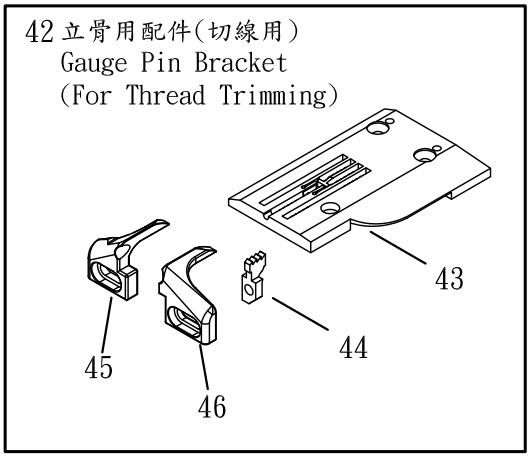
42 立骨用配件(切線用)
Gauge Pin Bracket
(For Thread Trimming)
43
44
45
46

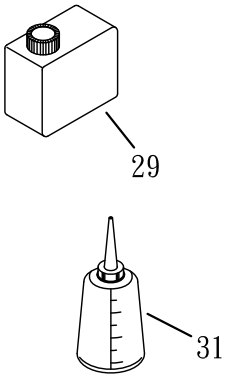
29
28
31
30

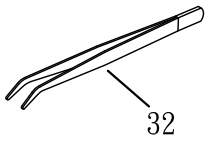
32

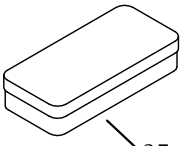
35

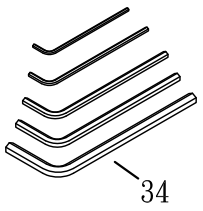
34

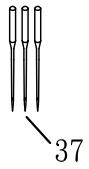
37

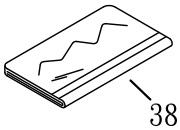
38

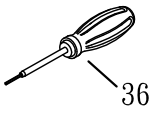
36

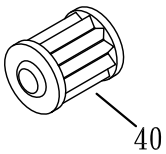
40

Ref. No.	Parts No.	Description	產 品 名 稱	Amt . Req .
1	15-01	Thread Stand	線架組	1
2	15-02	Cap	鐵管塑膠套	1
3	15-03	Thread Stand Rod(Upper)	線架鐵管上	1
4	15-04	Thread Guide Bracket(3)	3孔過線鐵板	1
5	15-05	Thread Guide Bracket(2)	2孔過線鐵板	1
6	15-06	Screw	鐵板固定螺絲	4
7	FM02	Spool Retaining Fig	橡膠固定器	5
8	15-08	Joint	鐵管接頭	1
9	15-09	Holder	塑膠接頭(大)	1
10	15-10	Thread Stand Rod(Lower)	線架鐵管(下)	1
11	15-11	Washer	鐵管華司	2
12	15-12	Nut	鐵管螺母	1
13	15-13	Thread Guide Bar	90度過線管	1
14	15-14	Holder	塑膠接頭小	1
15	15-15	Thread Guide Bar	6孔過線	1
16	15-16	Spool Retaining Fig	線筒固定器	5
17	15-17	Spool Pin	線筒柱子	5
18	15-18	Spring Washer	柱子華司	5
19	15-19	Spool Nut	柱子螺母	5
20	15-20	Spool Mat	海棉	5
21	15-21	Spool Tray	線筒盤子	5
22	15-25	Spool Pin Bracket (3)	3孔線軸架	1
23	N1631-2	Oil Reservoir Rubber Cushion	底座避震膠墊	4
24	15-37	Setting Screw (Long)	長底座固定螺絲	4
25	15-38	Washer	墊片	8
26	15-39	Spring Washer	彈簧華司	4
27	NV13	Nut	螺帽	4
28	FM09	Screwdriver	螺絲起子	1
29	FM11	SF Oil	油壺	1
30	FM12	Funnel	漏斗	1
31	FM13	Deerix Oil	油罐	1
32	FM14	Thread Tweezers	夾子	1
33				
34	FM20A	Hexagonal Wrench	六角板手	1
35	FM21	Box	零件盒	1
36	FM18	Screwdriver	六角起子	1
37	TVx7	Needle	車針	3
38	FM10	Head Cover	防塵套	1
39	15-26	Spool Pin Bracket (2)	2孔線軸架	1
40	FL20	Oil Filter	濾油器	1

＊ Ref. No. 41 to 51 ・・・・・See the following page

23-1

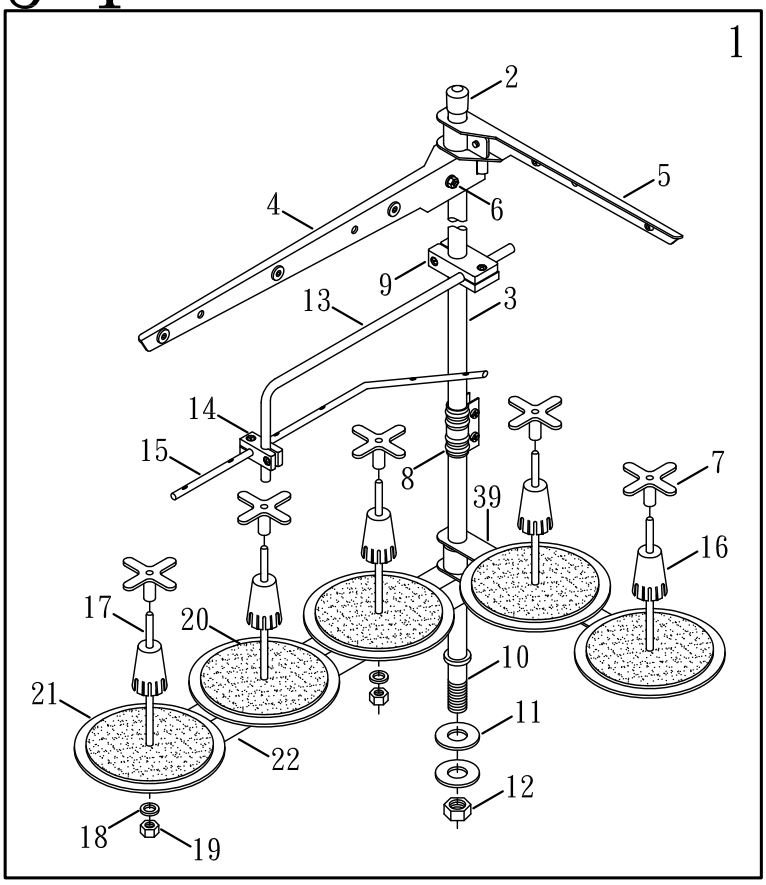
1
2
4
5
6
9
13
3
14
15
8
7
39
16
17
20
10
21
11
22
12
18
19

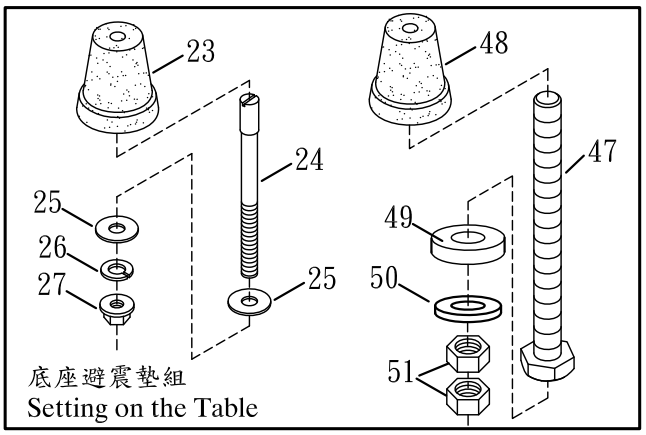
23
48
24
47
25
26
27
49
50
25
51
底座避震墊組
Setting on the Table

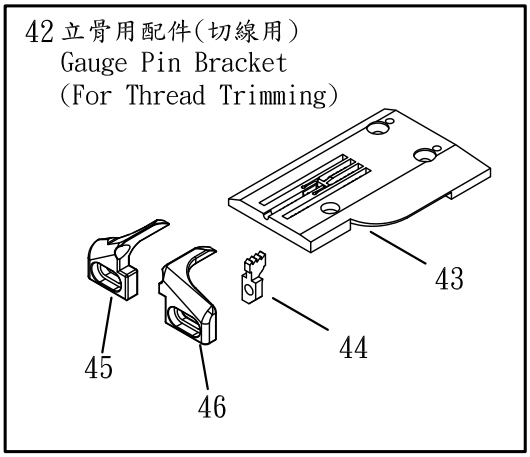
42 立骨用配件(切線用)
Gauge Pin Bracket
(For Thread Trimming)
43
44
45
46

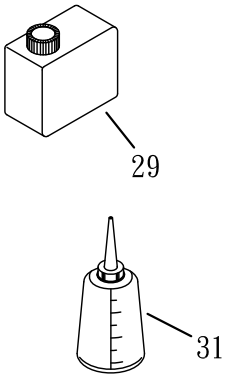
29
28
31
30

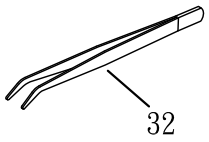
32

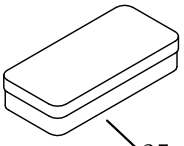
35

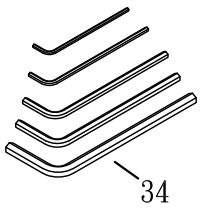
34

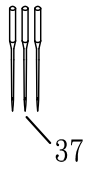
37

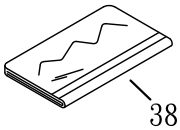
38

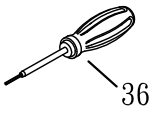
36

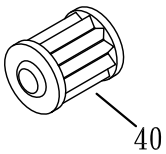
40

Ref. No.	Parts No.	Description	產 品 名 稱	Amt . Req .
42	L2342ST	Bulging Gauge Pin Bracket(2) (With EWT/AWT/AST)	立骨用配件(切線用)	
	-	Bulging Stitch Plate (With EWT/AWT/AST)	立骨針板(以下，切線用)	
	L1428-356H4	Stitch Plate (356)(Flatten type)(Optional)	針板(切線)(3針5.6)(立骨)(選購)	
43	L1428-364H1	Stitch Plate (360)(Flatten type)(Optional)	針板(切線)(3針6.0)(立骨)(選購)	1
	L1428-460HS	Stitch Plate (460)(Flatten type)(Needle: φ1.16)(Optional)	針板(切線)(4針6.0)(立骨)(細針 φ1.16)(選購)	
	L1428-464HS	Stitch Plate (464)(Flatten type)(Needle: φ1.16)(Optional)	針板(切線)(4針6.4)(立骨)(細針 φ1.16)(選購)	
44	L1157-356H	Differential Feed Dog(Middle)	差動齒	1
45	L0209H	Fabric Guide(Left) (Bulging)	導布器(左)(立骨)	1
46	L0211H	Fabric Guide(Right) (Bulging)	導布器(右)(立骨)	1
47	MJN1100	Setting Screw (Long)(M8-1.25X110)	長底座固定螺絲	2
48	LL2358-1	Oil Reservoir Rubber Cushion	底座避震膠墊	2
49	J3009	Rubber Cusion	橡膠	2
50	J3642	Washer	墊片	2
51	NV14	Nut	螺帽	4

＊ Ref. No. 01 to 40 ・・・・・See the following page

23-2

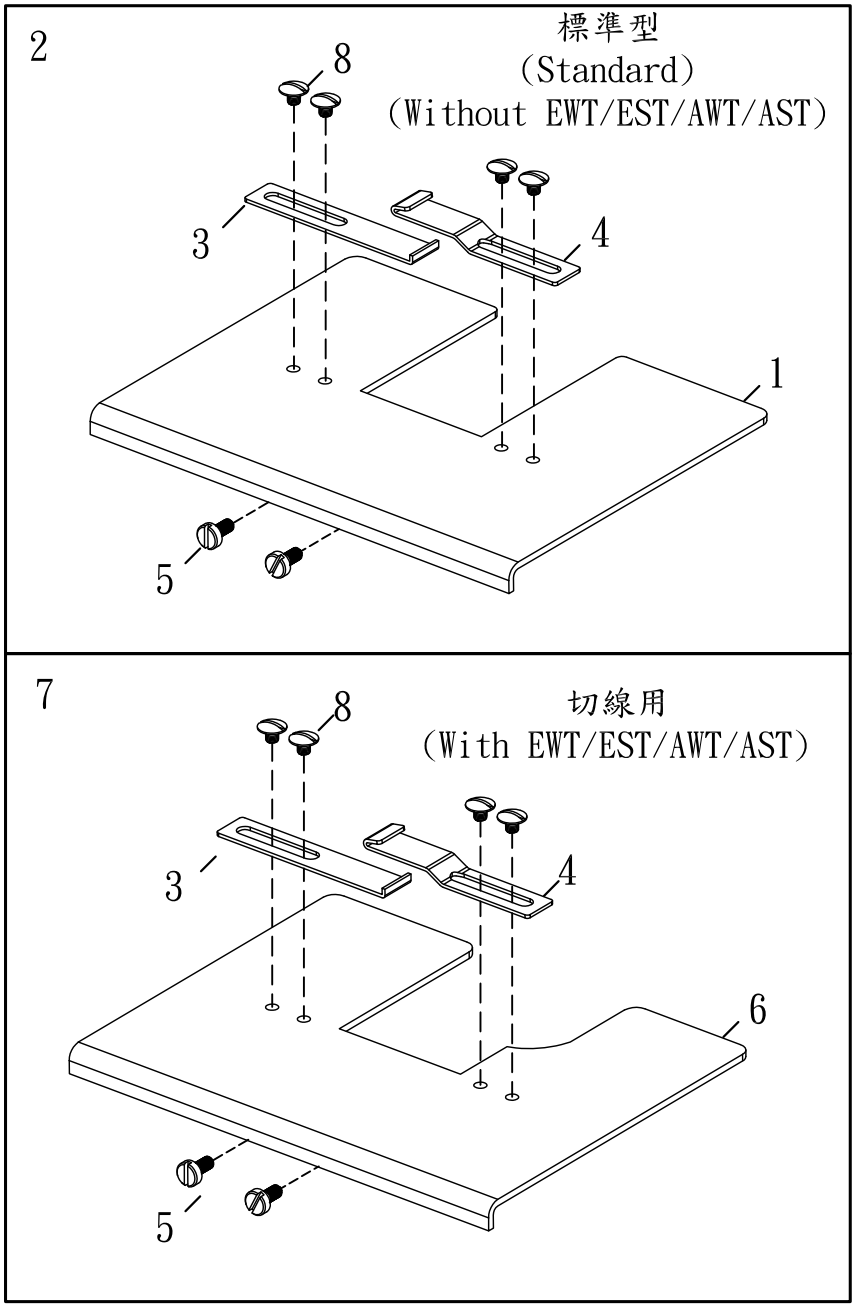

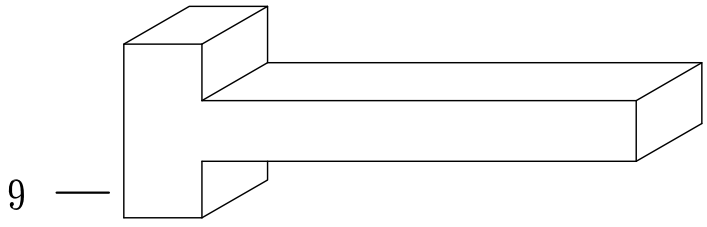

10 Spare Parts Book

11 Instruction Book

Ref. No.	Parts No.	Description	產品名稱	Amt . Req .
1	L2348	Attaching Plate for plain Machine	普通用併縫大布板	1
2	L2349	Attaching Plate C.Set for plain Machine (optional)	普通用併縫大布板組(選配)	1
3	CP14	Fabric Edge Guide(Left)	左擋邊	1
4	CP12	Width Aadjuster	可調擋邊	1
5	SF113	Screw(SM 9/64-40 x 6)	螺絲	2
6	L2353	Attaching Plate for Thread Trimming	切線用併縫大布板	1
7	L2354	Attaching Plate for Thread Trimming C.Set (optional)	切線用併縫大布板組(選配)	1
8	SF118	Screw(SM 9/64-40 x 4)	螺絲	4
9	SL070	Hook Timing Gauge	定規	1
10	LL032	Spare Parts Book	零件手冊	1
11	LL034	Instruction Book	使用說明書	1

24

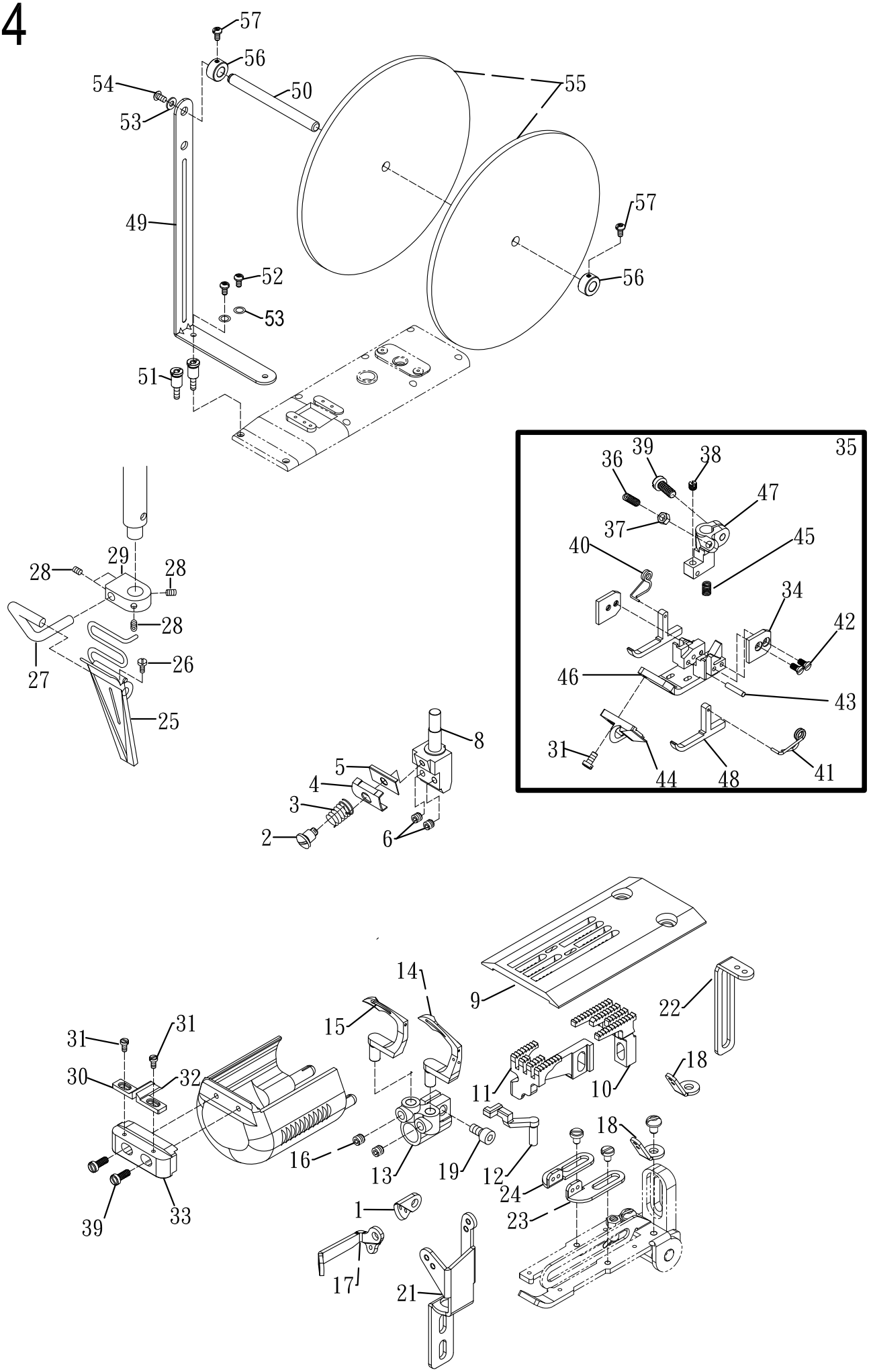
57
56
54
50
55
53
49
57
52
56
53
51
35
36
39
38
47
37
40
45
34
42
46
43
31
44
48
41
28
29
28
28
27
26
25
8
5
4
3
2
6
14
9
22
15
31
31
31
30
32
18
11
10
16
13
19
12
18
24
39
33
1
23
17
21

Ref. No.	Parts No.	Description	產 品 名 稱	Amt . Req .
1	L0376	Looper Thread Eyelet (Front)	鈎針過線片(前)	1
2	M0724	Screw (M3-0.5)	螺絲	1
3	M0731	Needle Thread Retainer Spring	彈簧	1
4	VC34	Thread Retainer Disc Support	小調子板	1
5	VC35	Needle Thread Retainer Disc	針線固定片	1
6	N2931	Screw (M3-0.5×3)	螺絲	2
7	L2407	Looper Eccentric	偏心輪	1
8	L2408-264	Needle Clamp (264)	針榴(264)	1
	L2408-280	Needle Clamp (280)	針榴(280)	
9	L2409-264	Stitch Plate (264)	針板(264)	1
	L2409-280	Stitch Plate (280)	針板(280)	
10	L2410	Main Feed Dog (264)	主動齒(264)	1
	L2410-280	Main Feed Dog (264)	主動齒(280)	
11	L2411B-264	Differential Feed Dog (264)	差動齒(264)	1
	L2411B-280	Differential Feed Dog (264)	差動齒(280)	
12	L2412	Needle Guard	針擋	1
13	L2413-2	Looper Holder	鈎針座	1
14	L2414	Main Looper	主鈎針	1
15	L2415	Looper	副鈎針	1
16	SV227	Screw (M4-0.7×5)	螺絲	2
17	L2417	Looper Thread Eyelet	鈎針過線片	1
18	L2418	Looper Thread Eyelet	鈎針過線片	2
19	SF224	Screw (M4-0.7×8)	螺絲	1
20	GL12	Screw (M5-0.8×8)	螺絲	2
21	L2421	Bottom Plate Eyelet	下座底板過線	1
22	L2422	Looper Eyelet Plate	下飾線過線板	1
23	FJ12	Take-up Plate (Right)(264)	提線板(右)(264)	1
24	FJ14	Take-up Plate (Left)(264)	提線板(左)(264)	1
25	L2425	3/4"3/8 " Tape Binder	3/4"3/8"貼條喇叭	1
26	P1521	Screw (M4-0.7×6)	螺絲	1
27	L2427	Tape Binder Bar	固定桿	1
28	SF228	Screw(M4-0.7×4)	螺絲	1
29	L2429	Tape Binder Stay	喇叭座	1
30	L2430	Fabric Guide (Left)	導布器(左)	1
31	N0287	Screw (M2.5-0.45×0.45)	螺絲	3
32	L2432	Fabric Guide (Right)	導布器(右)	1
33	L2433	Folder Stand	導布器固定座	1
34	VH52NI	Fixed Plate	方形固定片	2
35	L2435-264	Presser Foot C.Set (264)	壓腳組(264)	1
	L2435-280	Presser Foot C.Set (280)	壓腳組(280)	

＊ Ref. No. 36 to 57 ・・・・・See the following page

24

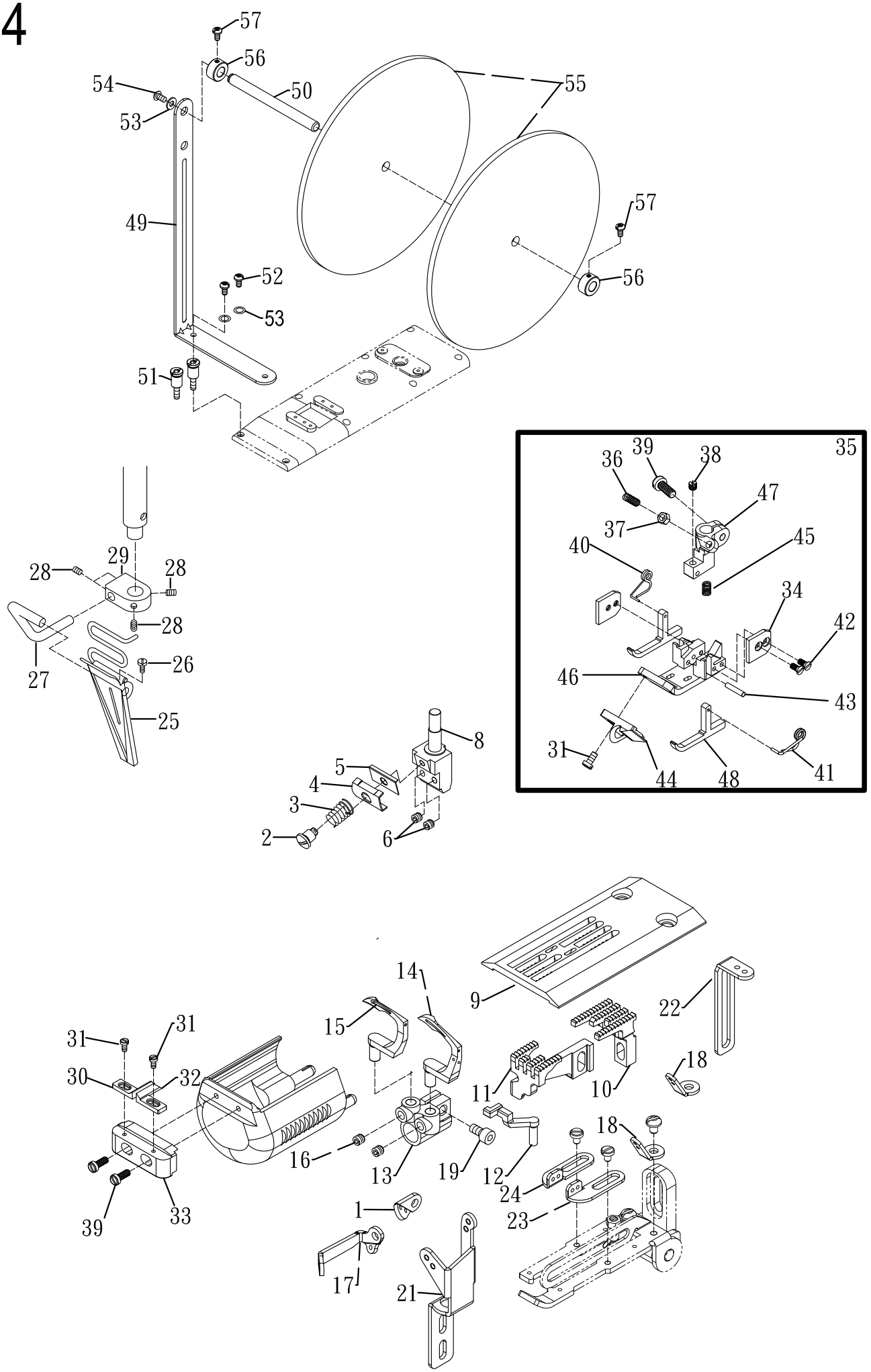
57
56
54
50
55
53
49
57
52
56
53
51
35
36
39
38
47
37
40
45
34
42
46
43
31
44
48
41
28
29
28
28
27
26
25
8
5
4
3
2
6
14
9
22
15
31
31
31
30
32
18
11
10
16
13
19
12
18
24
39
33
1
23
17
21

Ref. No.	Parts No.	Description	產品名稱	Amt. Req.
36	SV109	Screw (SM 1/8-44×10)	螺絲	1
37	NV11	Nut (SM 1/8-44x9.5)	螺母	1
38	SF106	Screw (SM 1/8-44×2.8)	螺絲	1
39	SF116	Screw (SM 9/64-40×9)	螺絲	3
40	VH16	Presser Foot Spring(Left)	壓腳彈簧(左)	1
41	VH24	Presser Foot Spring(Right)	壓腳彈簧(右)	1
42	SV103	Screw (SM 3/32-56×5)	螺絲	4
43	VH20	Pin	銷	1
44	L2444	Fabric Guide(Front)	導布器(前)	1
45	VH21	Presser Foot Spring	彈簧	1
46	L2446-264	Main Presser Foot	壓腳主體	1
	L2446-280	Main Presser Foot	壓腳主體	
47	L2447	Upper Presser Foot	壓腳頭	1
48	VH53NI	Left Guide Foot	T行船導片	2
49	L2449	Bracket	滾盤托架	1
50	L2450	Axis	軸	1
51	N2230	Screw (In:M4)(Out:M4)	螺樁螺絲	2
52	SV229	Screw (M4-0.7x7)	螺絲	2
53	WF04-1	Washer	華司	3
54	SV235	Screw (M4-0.7x8)	螺絲	1
55	J171	Turntable	布條轉盤	2
56	L2456	Collor (8.02mm×16mm×8mm)	定位環	2
57	SV229	Screw (M4-0.7x7)	螺絲	2

＊ Ref. No. 1 to 35 ・・・・・See the following page

※無標示尺度最大公差值±1.0

設變單號碼:1807-229

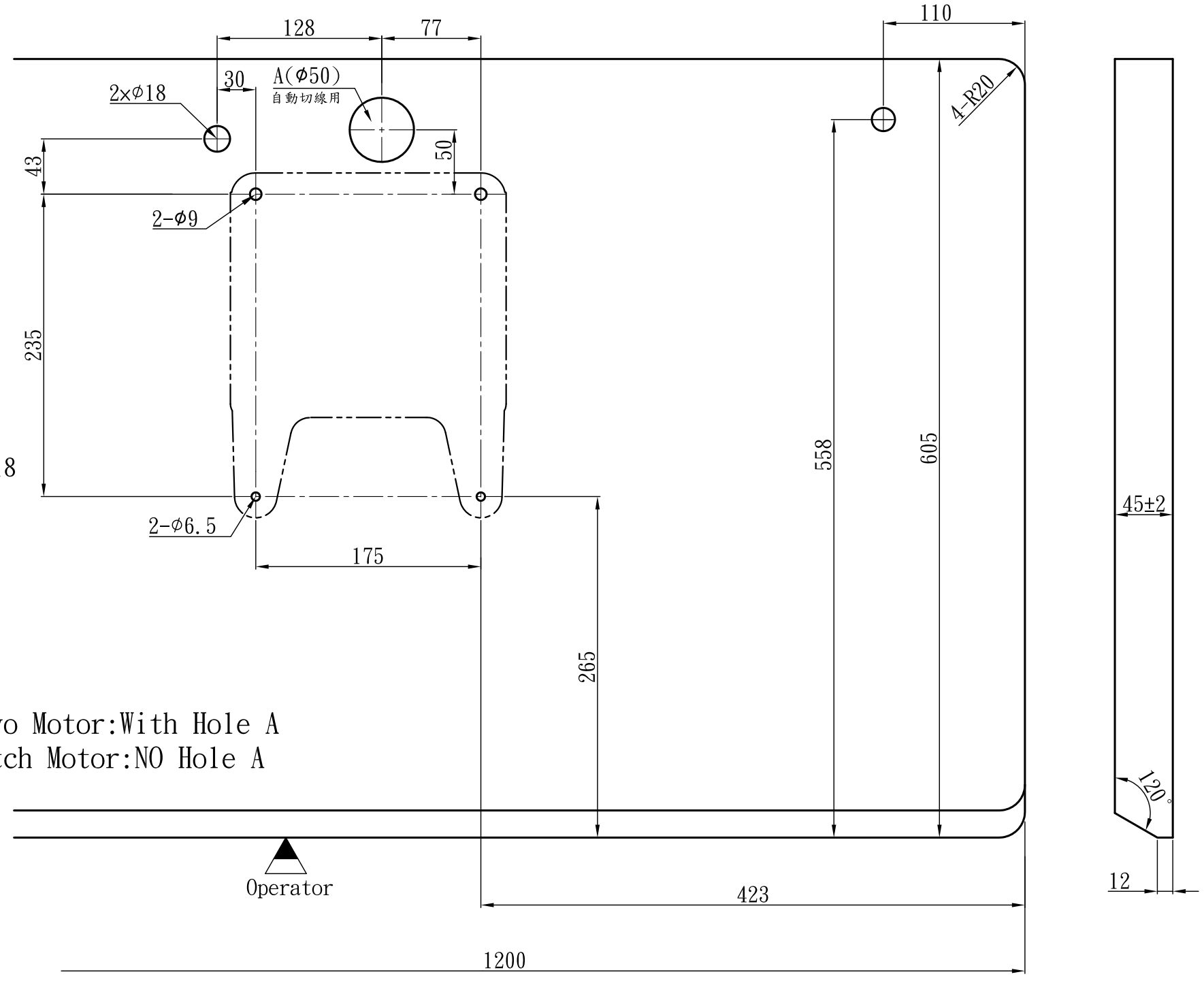

直驅小馬達
機種：SL-2800
圖號：LL035
日期：107.07.18
圖別：成品圖
材質：耐火板
比例：1 / 4

※ For Servo Motor:With Hole A
※ For Clutch Motor:NO Hole A

SL-2700,SL-2800 (標準&切線) 針距組 對照表
Comparison Table Between SL-2700,SL-2800 and SL-2700,SL-2800 EWT/EST/AWT/AST

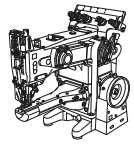
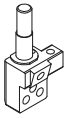
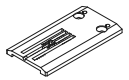
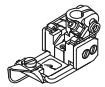

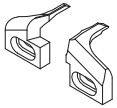
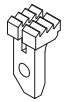
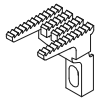
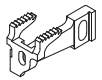

機種 MACHINE TYPE/SPEC		針數 NEEDLE	針距 NEEDLE GAUGE	針鎦 NEEDLE HOLDER	針板 NEEDLE PLATE	壓腳 PRESSER FOOT	針 NEEDLE	導布器 FABRIC GUARD	副齒 DIFF.FEED DOG(MIDDLE)	主齒 MAIN FEED DOG	差動齒 DIFF.FEED DOG	下勾針 LOOPER
標準 Standard SL-2700 SL-2800	倒骨 Fold - down	2針 2 NEEDLE	64 (special)	L2408-264 (special)	L2409-264 (special)	L2435 (special)	TV*7 78/11-2	L2430, L2432 (special)	N/A	L2410 (special)	L2411 (special)	L2414,L2415 (special)
			40	L0630-240	L0634-2403	VH240	TV*7 78/11-2	LL0268 LL0269	L1157-3563	L1158-356-1	L1154-356-4	L0943-4
			48	L0630-248	L0634-2483	VH248	TV*7 78/11-2					
		3針 3 NEEDLE	48	L0630-348	L0634-348	VH348	TV*7 78/11-2					
			56	L0630-356-2	L0634-3566	VH356-A1	TV*7 78/11-2					
			60	L0630-360	L0634-3603	VH360	TV*7 78/11-2					
			64	L0630-364	L0634-3641	VH364	TV*7 78/11-2					
		4針 4 NEEDLE	60	L0630-4601	L0634-4603	VH460	MY1014B					
			64	L0630-464	L0634-4643	VH464	TV*7 78/11-2					
	立骨 Bulging	3針 3 NEEDLE	56	L0630-356-2	L0634-356H2	VH356-A1	TV*7 78/11-2	L0209H L0211H	L1157-356H			
			64	L0630-364	L0634-364H	VH364	TV*7 78/11-2					
		4針 4 NEEDLE	60	L0630-4601	L0634-460H1	VH460	MY1014B					
			64	L0630-464	L0634-464H1	VH464	TV*7 78/11-2					
切線 For Thread Trimming SL-2700EST SL-2800EST	倒骨 Fold - down	2針 2 NEEDLE	40	L0630-240	L1428-2404	VH240	TV*7 78/11-2	LL0268 LL0269	L1157-3563	L1158-356-1	L1154-356-4	L0943-4
			48	L0630-248	L1428-2484	VH248	TV*7 78/11-2					
		3針 3 NEEDLE	48	L0630-348	L1428-348	VH348	TV*7 78/11-2					
			56	L0630-356-2	L1428-3565	VH356-A1	TV*7 78/11-2					
			60	L0630-360	L1428-3604	VH360	TV*7 78/11-2					
			64	L0630-364	L1428-3642	VH364	TV*7 78/11-2					
		4針 4 NEEDLE	60	L0630-4601	L1428-4605	VH460	MY1014B					
			64	L0630-464	L1428-4645	VH464	TV*7 78/11-2					
	立骨 Bulging	3針 3 NEEDLE	56	L0630-356-2	L1428-356H4	VH356-A1	TV*7 78/11-2	L0209H L0211H	L1157-356H			
			64	L0630-364	L1428-364H1	VH364	TV*7 78/11-2					
		4針 4 NEEDLE	60	L0630-4601	L1428-460H3	VH460	MY1014B					
			64	L0630-464	L1428-464H3	VH464	TV*7 78/11-2					

accor®
SINCE 1989

SHING LING®
星菱牌工業用縫紉機
INDUSTRIAL SEWING MACHINE

台正字第8144號

made in TAIWAN

TAIWAN EXCELLENCE

SL-703-GX-452/460/DS/PLA/VD
4-needle 6-thread feed-off-the-arm Interlock Flatseaming Machine with dual differential feed ratio regulator
手臂型四針六線併縫機(附雙差動送布齒裝置)

SL-2700-AST/EST
Feed-up-the-arm Interlock Machine with Compact Servo Motor and Thread Trimmer
縱筒型三針五線雙面飾網縫機

SL-2800-356/SM
Feed-up-the-arm Interlock Machine with Compact Servo Motor and Thread Trimmer
縱筒型三針五線雙面飾網縫機

VG-999ES-AST-TF-DS
Extremely-Small Cylinder-bed Interlock Machine with Thread Trimmer and Topfeed
超細筒型三針五線雙面飾網縫機

VG-888S-TF-AST
Small Cylinder-bed Interlock Machine with Thread Trimmer and Top Feeder
細筒型三針五線雙面飾網縫機
(附上送裝置)

VG-888A-TF/AST
Top Feeder for 3-needle 5-thread Cylinder-bed Interlock Machine
橫筒型三針五線雙面飾網縫機
(附上送裝置)

VG-999S-N700-AST-TF-DS
Small Cylinder-bed Interlock Machine with Left-hand Knife and Top Feeder for Hemming
細筒型三針五線雙面飾網縫機(附左修刀)

VG-888A-N600-TF/AST
Interlock Machine with Left-hand Knife and Thread Trimmer for Hemming
橫筒型附左修刀雙面飾網縫機

SL-1790S
Computer-controlled High-speed Lockstitch Buttonholing Machine
高速電子平頭鎖眼機

VG-999-SB-AST/EST-DS
High-speed Short Cylinder-bed Interlock Machine with Thread Trimmer
短筒型三針五線雙面飾網縫機

VG-999-R500-AST-RP
Interlock Machine with Right-hand Knife and Rear Puller for Elastic Waistband Attaching
高速橫筒型三針五線附右修刀雙面飾網縫機

VG-999-356/EST/DS/ZBR
Dual Colors Decorative Stitches Interlock Machine with Top and Under Thread Trimmer
高速橫筒型三針五線雙色上飾線網縫機